SOGEM Group

ALASKA

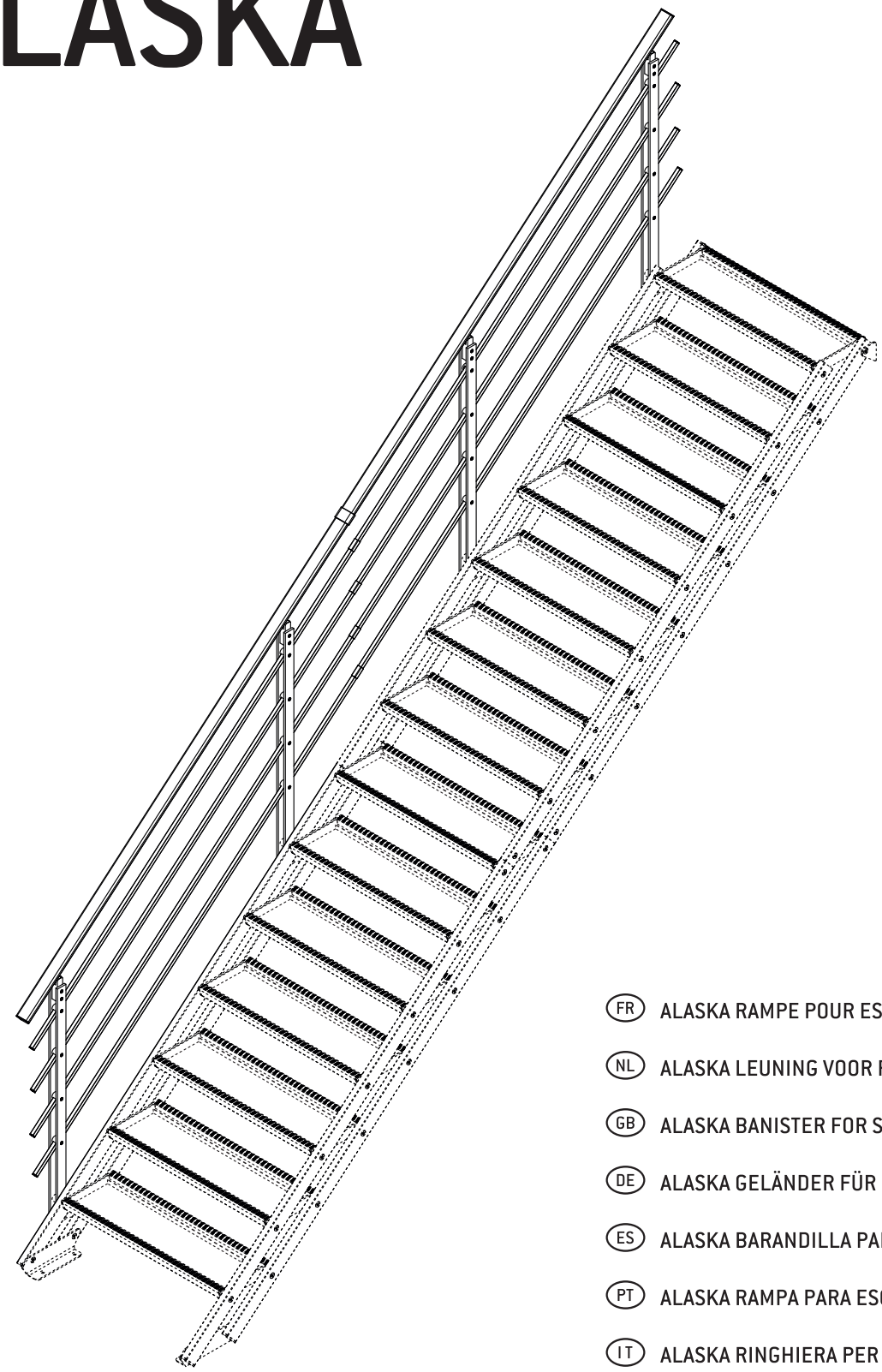

(FR) ALASKA RAMPE POUR ESCALIER DROIT

(NL) ALASKA LEUNING VOOR RECHTE TRAP

(GB) ALASKA BANISTER FOR STRAIGHT STAIRS

(DE) ALASKA GELÄNDER FÜR GERADE TREPPE

(ES) ALASKA BARANDILLA PARA ESCALERA RECTA

(PT) ALASKA RAMPA PARA ESCADA DIREITA

(IT) ALASKA RINGHIERA PER SCALA DRITTA

(RO) ALASKA RAMPA PENTRU SCARA DREAPTA

SOGEM Group

01 35x55x2000 x2	02 14x14x2000 x8	03 41x55x1010 x4	04 25x26x119 x4	05 35x55x5 x1	06 35x55x5 x1	07 40x41x61 x1	08 14x14x5 x8
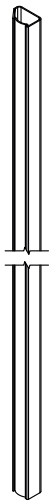			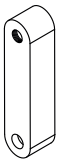	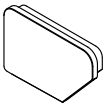	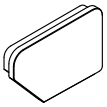		
70309513 70309514	70309515 70309516	70309517 70309518	70309255 70309256	70309121 70309122	70309123 70309124	70309125 70309126	70309127 70309128

09 11x11x100 x4	10 17x17x26 x4	11 026x7,5 x4	12 03,9x19 x8	13 M10x90 x4
	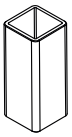	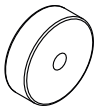		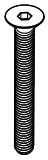
70309129	70309130 70309131	70309132 70309133	70001050	70309120

14 05x45 x4	15 M10x20 x8	16 40x99x23 x1	17 020x20 x4
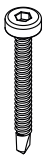	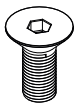		
70309119	70309118	70001051	70309142 70309143

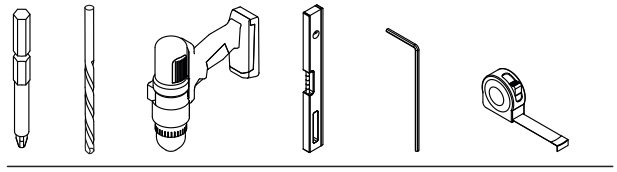

Ph2/3 Ø3
Pz2/3 Ø4.5

2,5
4 6

= 100%

= 75%

1

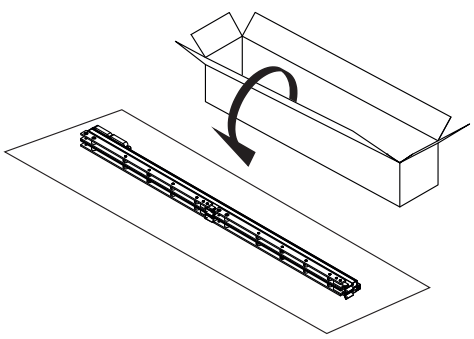

2

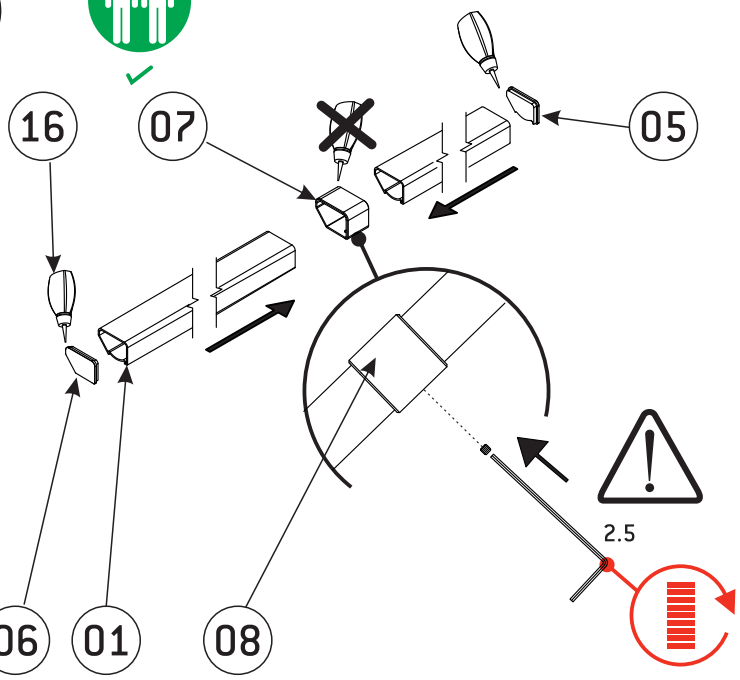

SOGEM Group

3

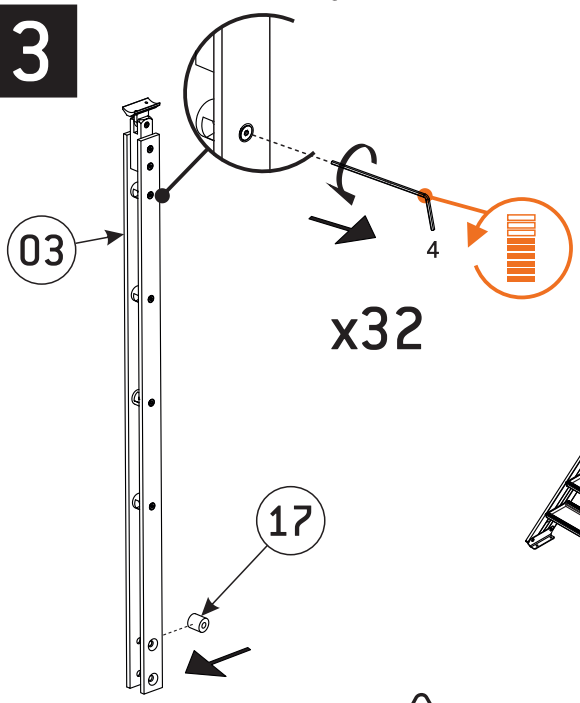

4

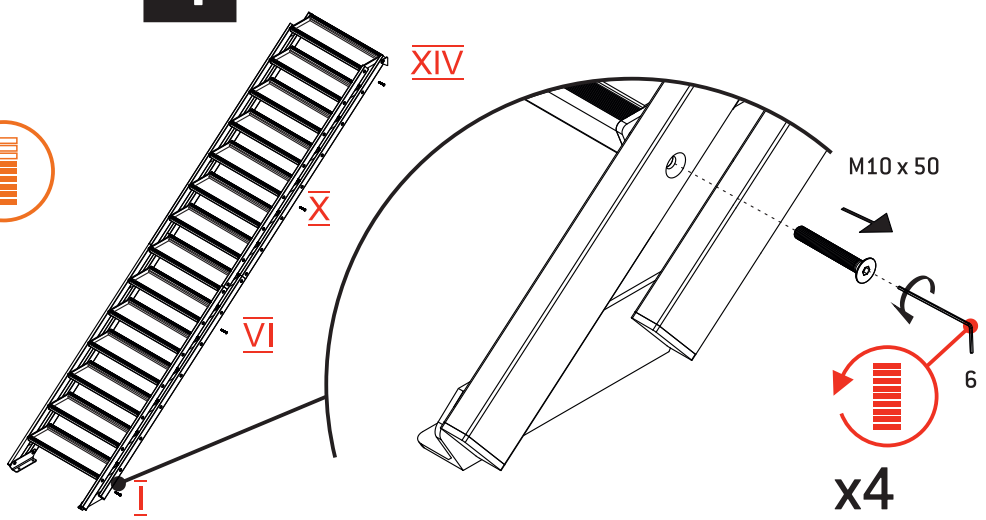

5

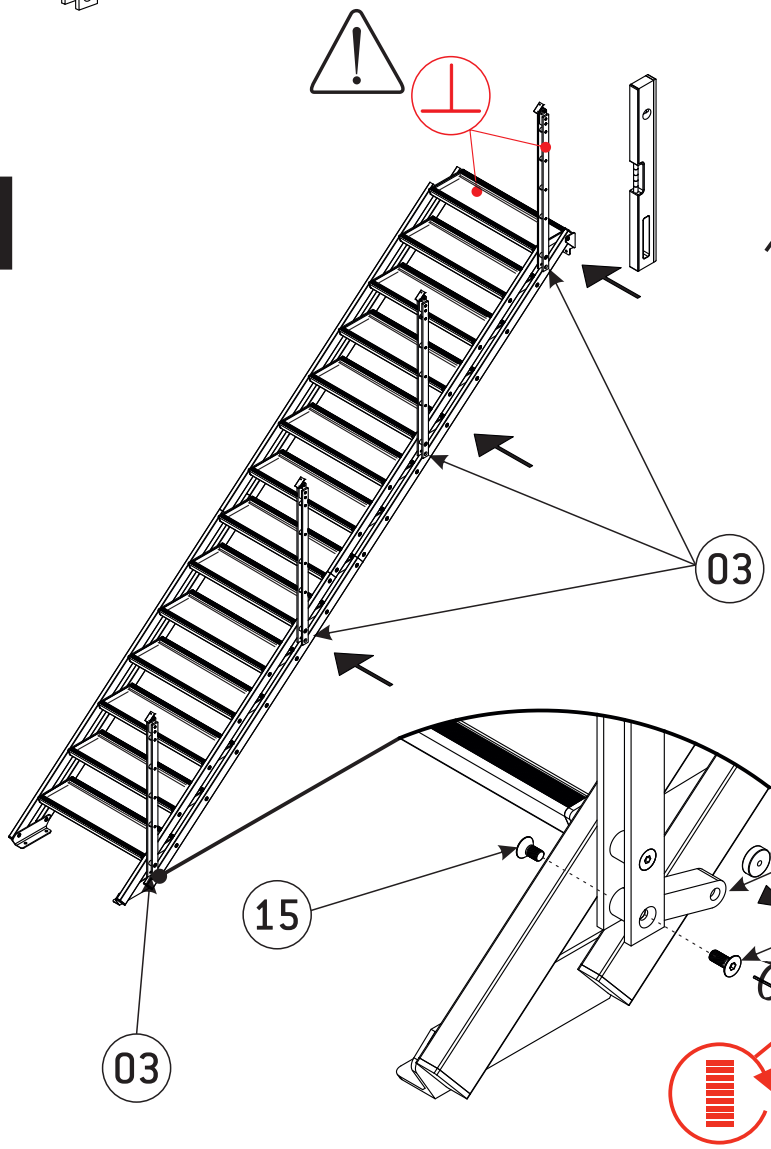

6

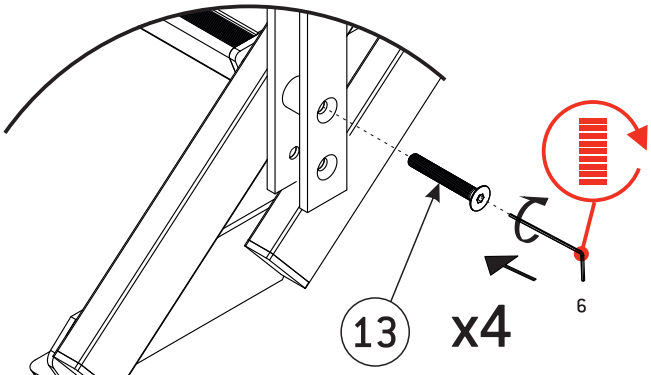

7

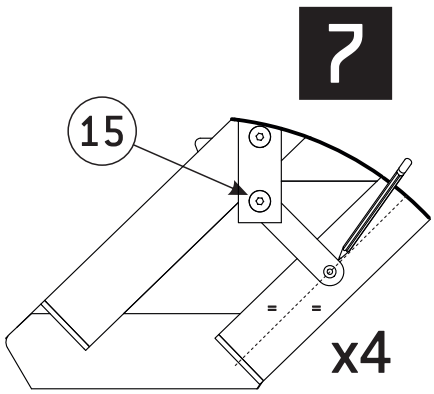

SOGEM Group

8

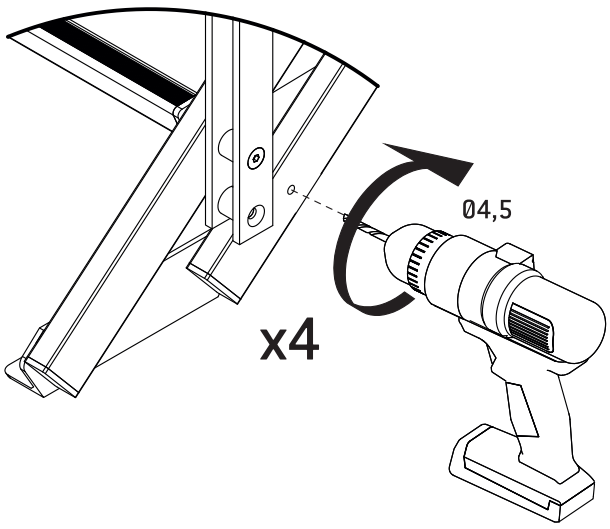

9

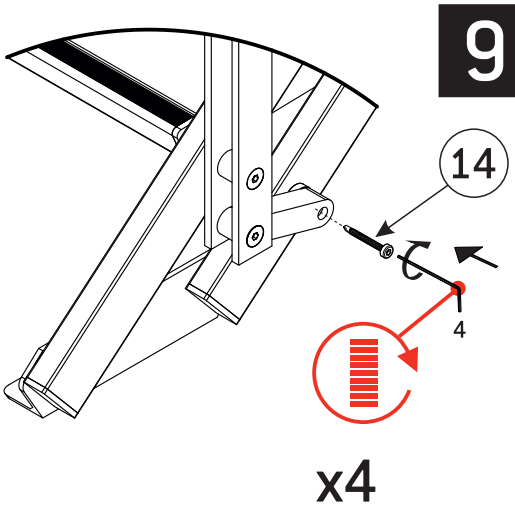

10

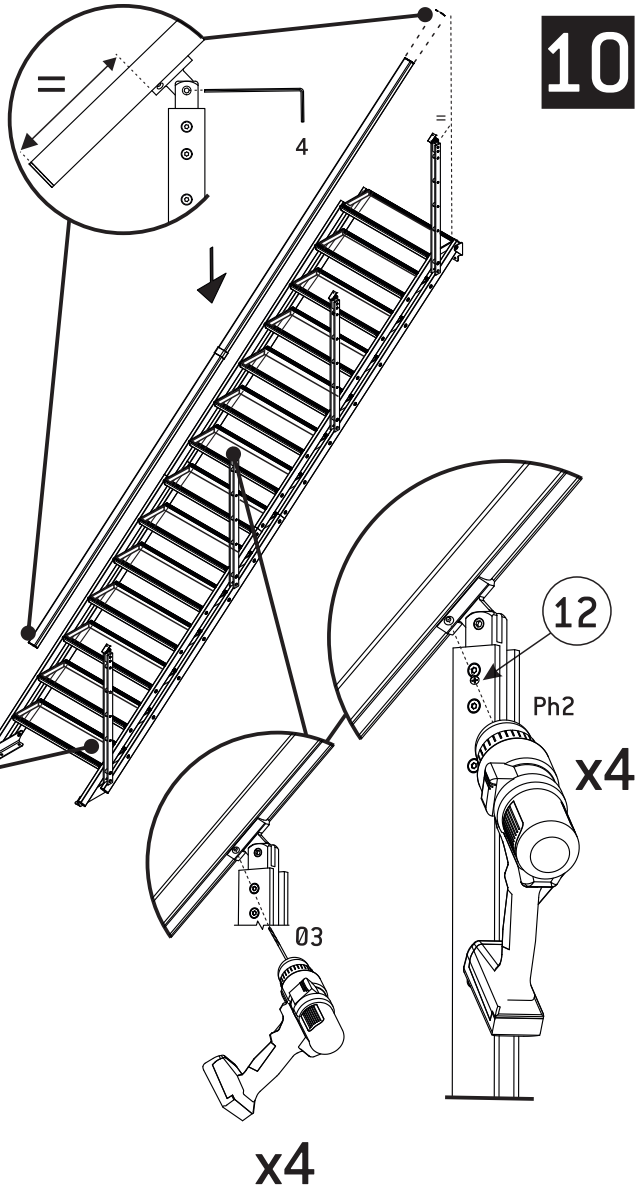

11

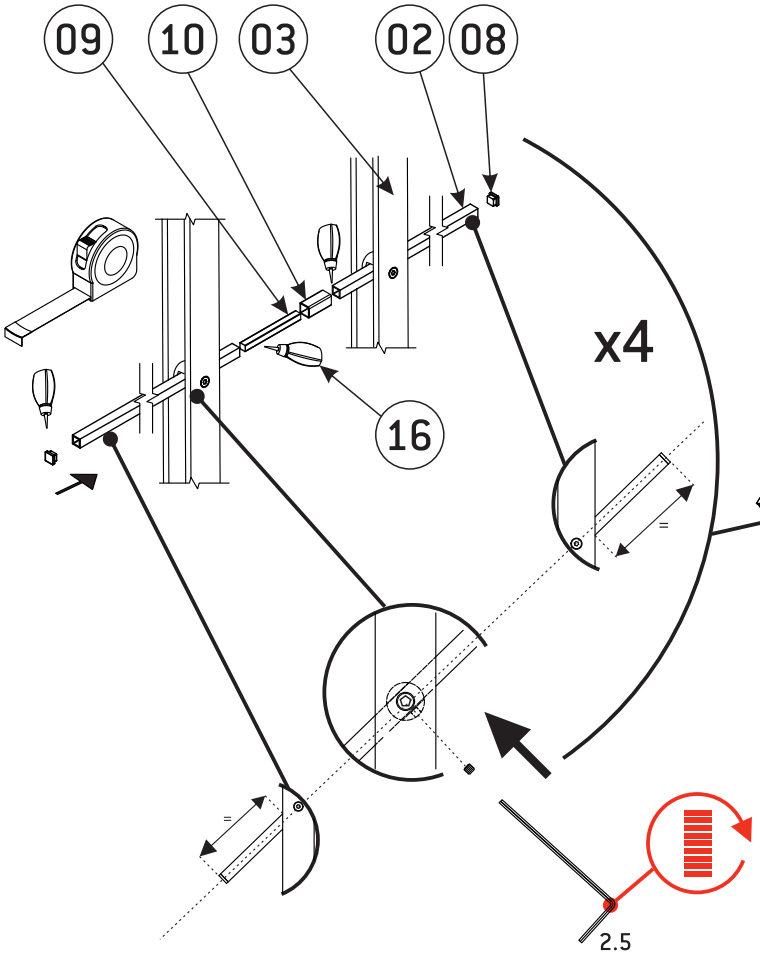

SOGEM Group

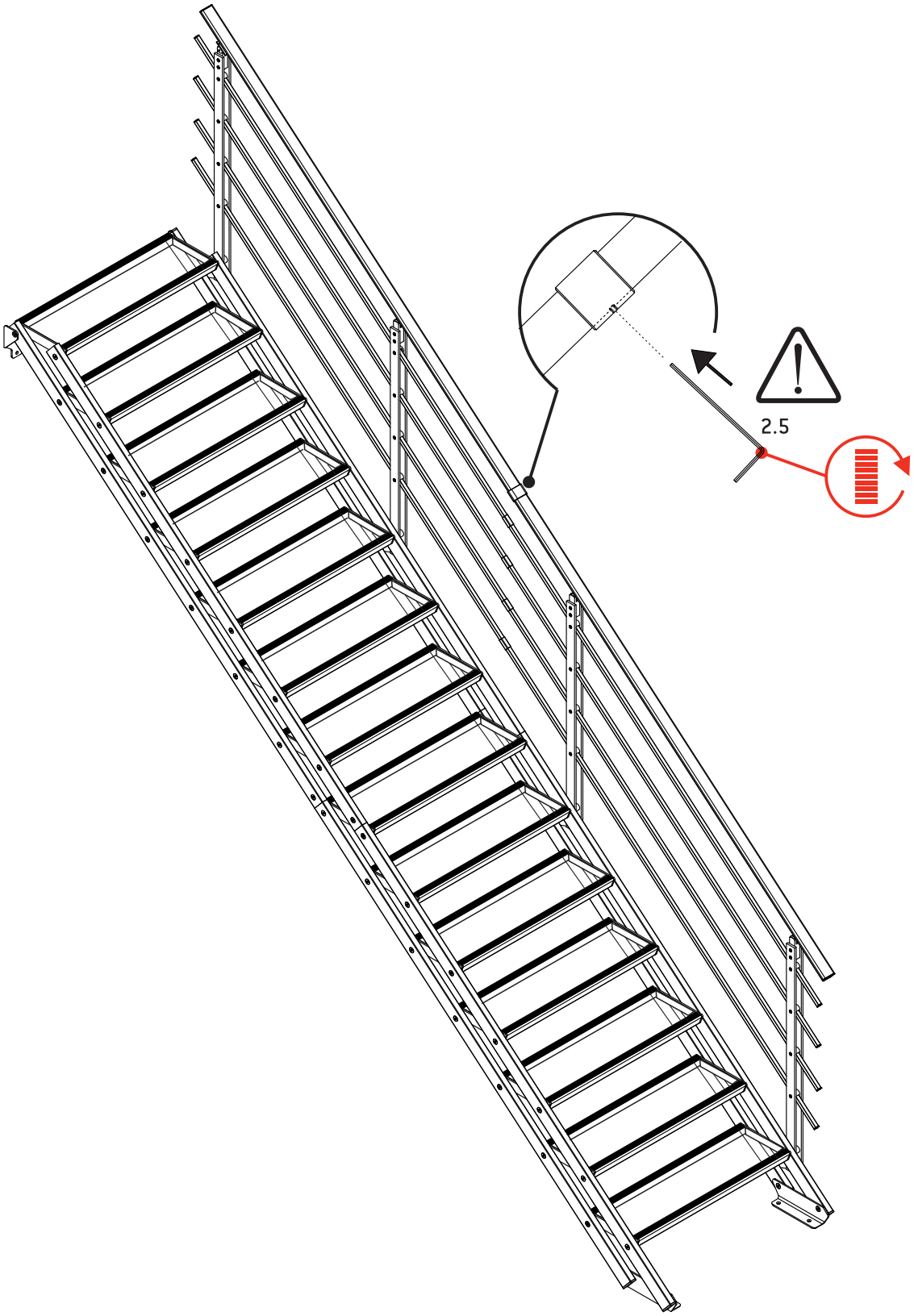

RUE GRIMARD,39 B-6061 MONTIGNIES-SUR-SAMBRE(CHARLEROI)-BELGIUM
TEL: +32/71/25.39.60 FAX: +32/71/25.39.72 E-MAIL: info@sogem-sa.com