SOGEM Group

TRADI ECO

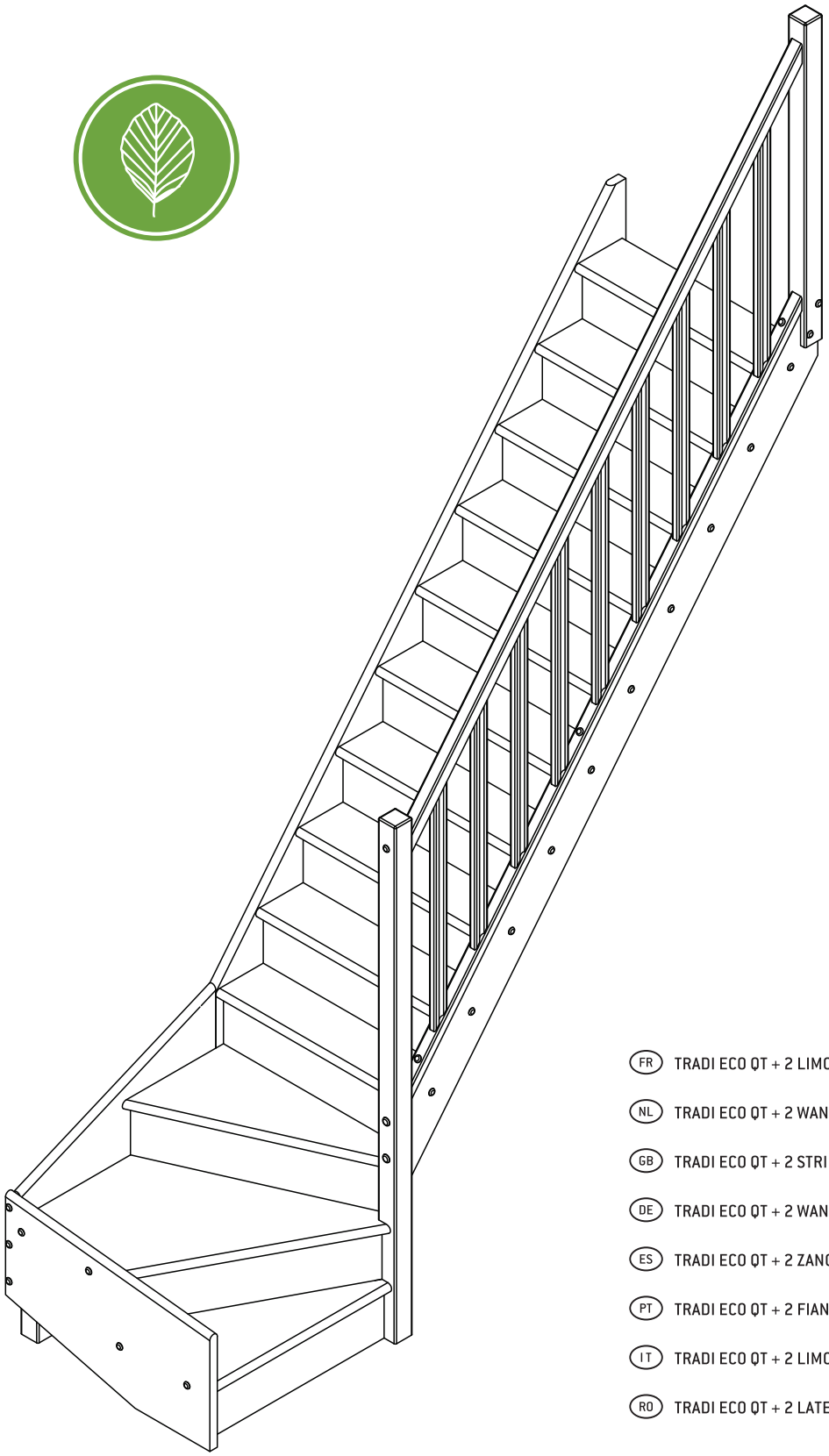

(FR) TRADI ECO QT + 2 LIMONS + RAMPE +10 MARCHES+10 CONTREMARCHES

(NL) TRADI ECO QT + 2 WANGEN + LEUNING+10 TREDEN+10 TEGENTREDEN

(GB) TRADI ECO QT + 2 STRINGS + BANISTER + 10 TREADS+ 10 RISERS

(DE) TRADI ECO QT + 2 WANGEN +GELANDER + 10 STÜFEN + 10 SETZSTÜFEN

(ES) TRADI ECO QT + 2 ZANCAS + BARANDILLA + 10 PELEDINOS + 10 CONTRAHUELLAS

(PT) TRADI ECO QT + 2 FIANCHI + RINGHIERA + 10 GRADINI+10 ALZATE

(IT) TRADI ECO QT + 2 LIMONS + RAMPA +10 + 10 ALZATE MERCATI

(RO) TRADI ECO QT + 2 LATERALE + RAMPA +10 TREPTE + 10 CONTRATREPTE

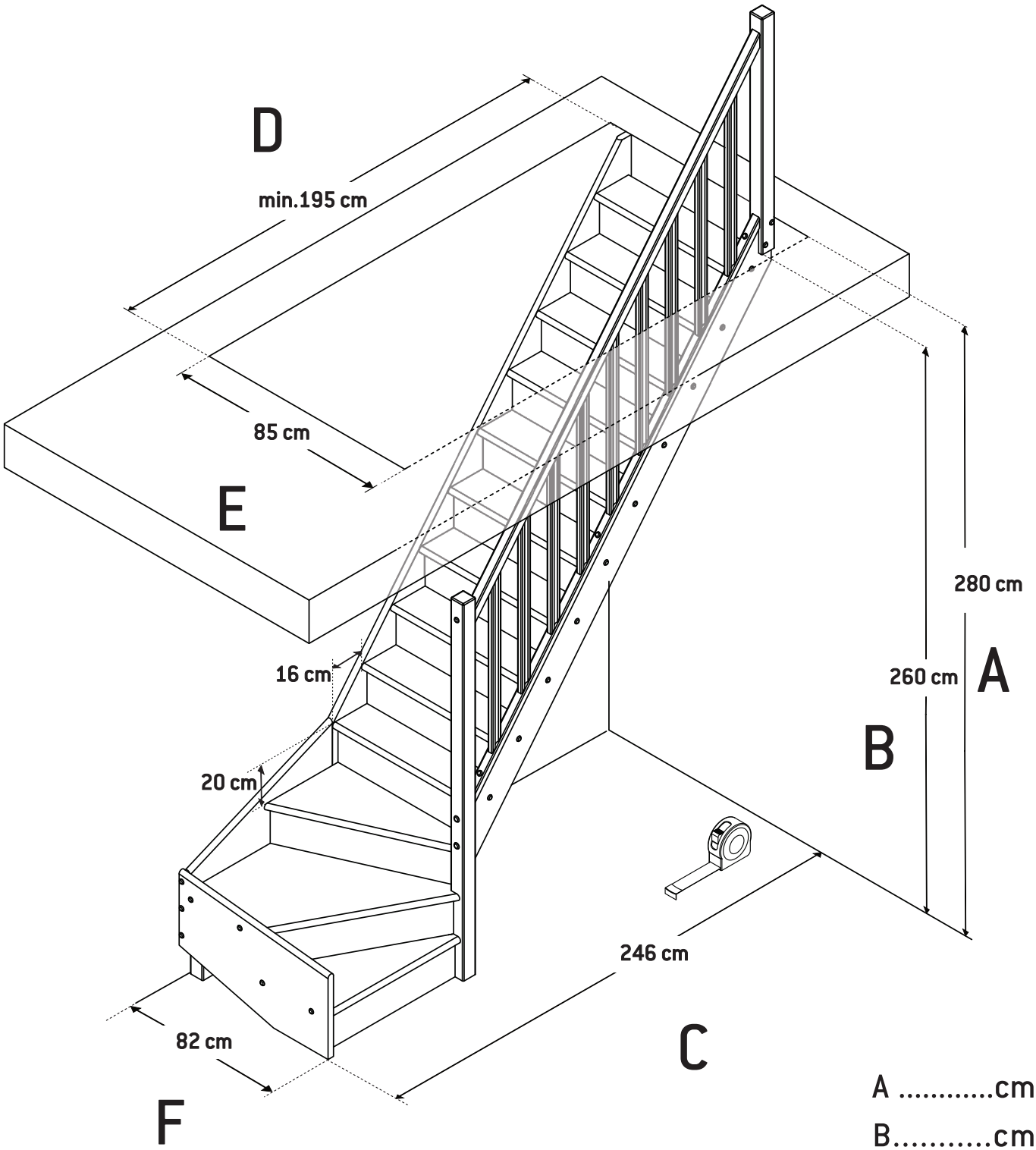

A .....cm

B.....cm

C .....cm

D .....cm

E .....cm

F .....cm

SOGEM Group

01 30x190 2816 x1	02 30x190x2816 x1	03 30x190x762 x10	04 70x70x1796 x1	05 70x70x1125 x1	06 25x50x874.4 x9	07 30x42x2580 x1	08 16x26x2580 x1	09 42x45x2580 x1
10 30x351x784 x1	11 30x400x820 x1	12 30x400x740 x1	13 30x768x781 x1	14 30x415x736 x1	15 70x70x370 x1	16 70x70x570 x1	17 18x209x760 x10	18 18x209x828 x1
19 18x209x828 x1	20 18x177x735 x1	21 45x25x242 x2 (11,24 cm)	22 012x11 x43	23 020x11 x2	24 040x5 x4	25 04x35 x3	26 04x40 x91	27 05x50 x24
28 05x60 x21	29 34x16 x2	30 M8x80 x2	31 M8x70 x2	32 M8 x2				

3:30h

Ph2/3
Pz2/3 Tx10-30

010 04
08 012

13

18x27 x100 x2

04x35

6x60

07x70 x4

1

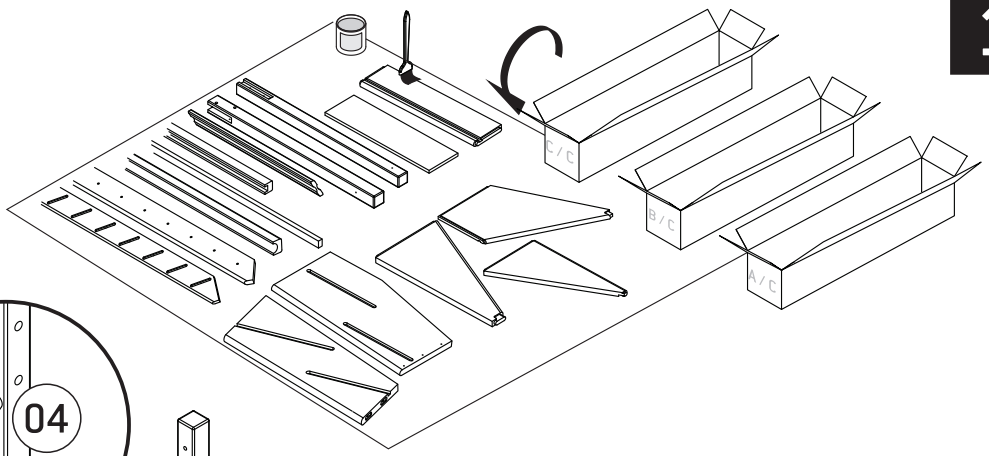
C/C
B/C
A/C

2

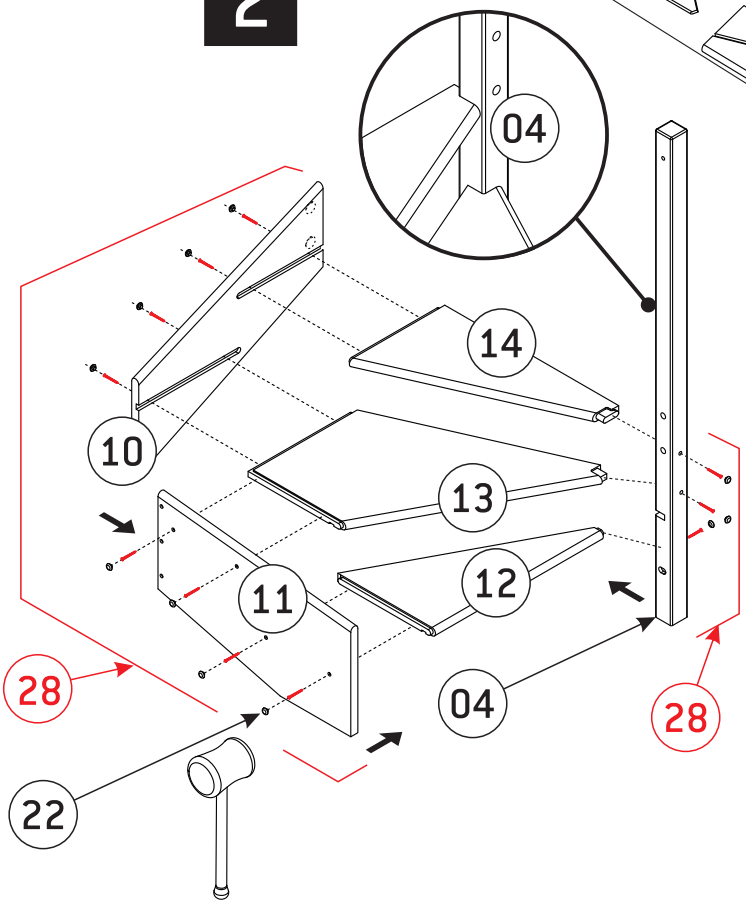
04
14
10
13
11
12
28
04
28
22

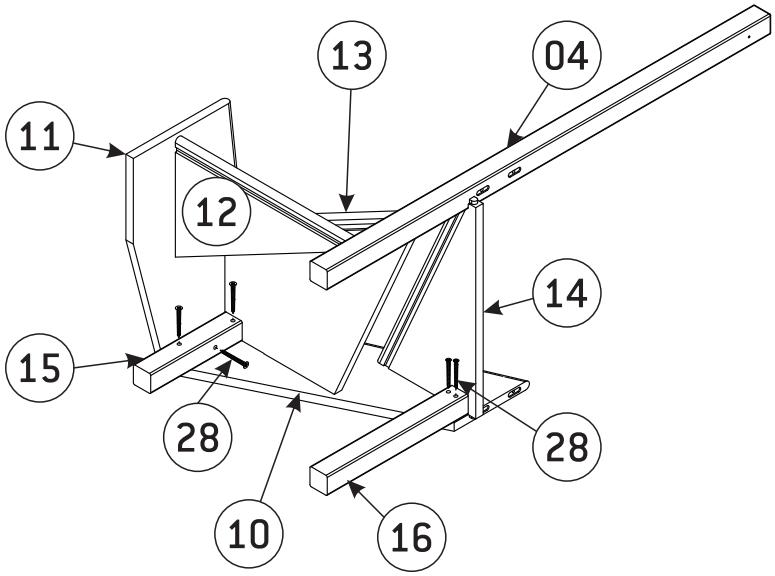
13
04
11
12
14
15
28
28
10
16

3

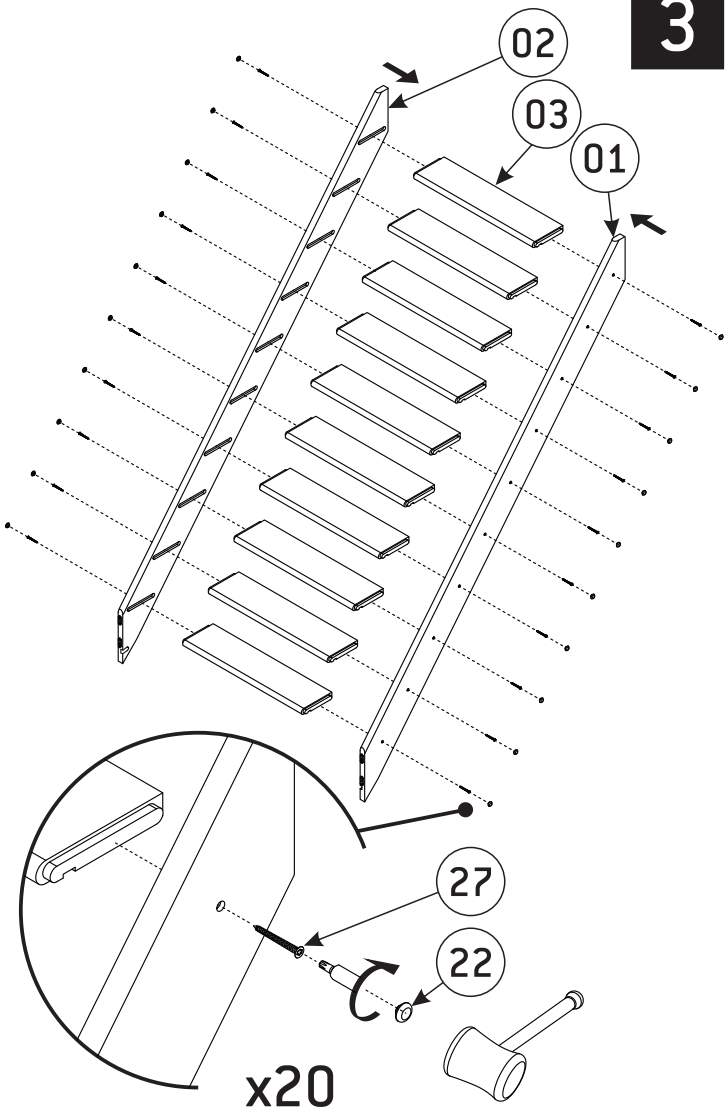
02
03
01
27
22
x20

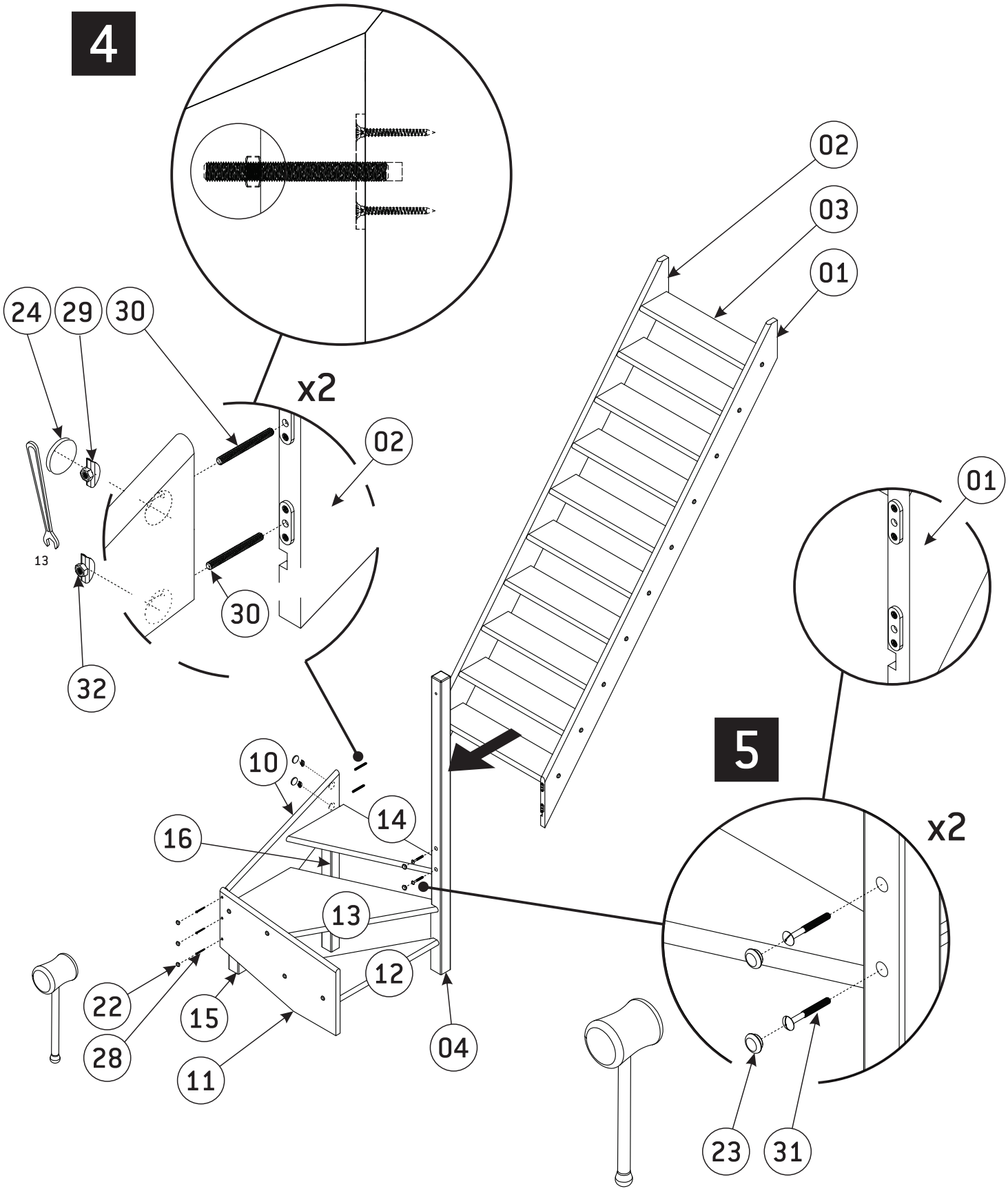
4
02
03
01
24
29
30
x2
02
13
30
32
01
5
10
14
16
13
12
22
28
15
11
04
x2
23
31

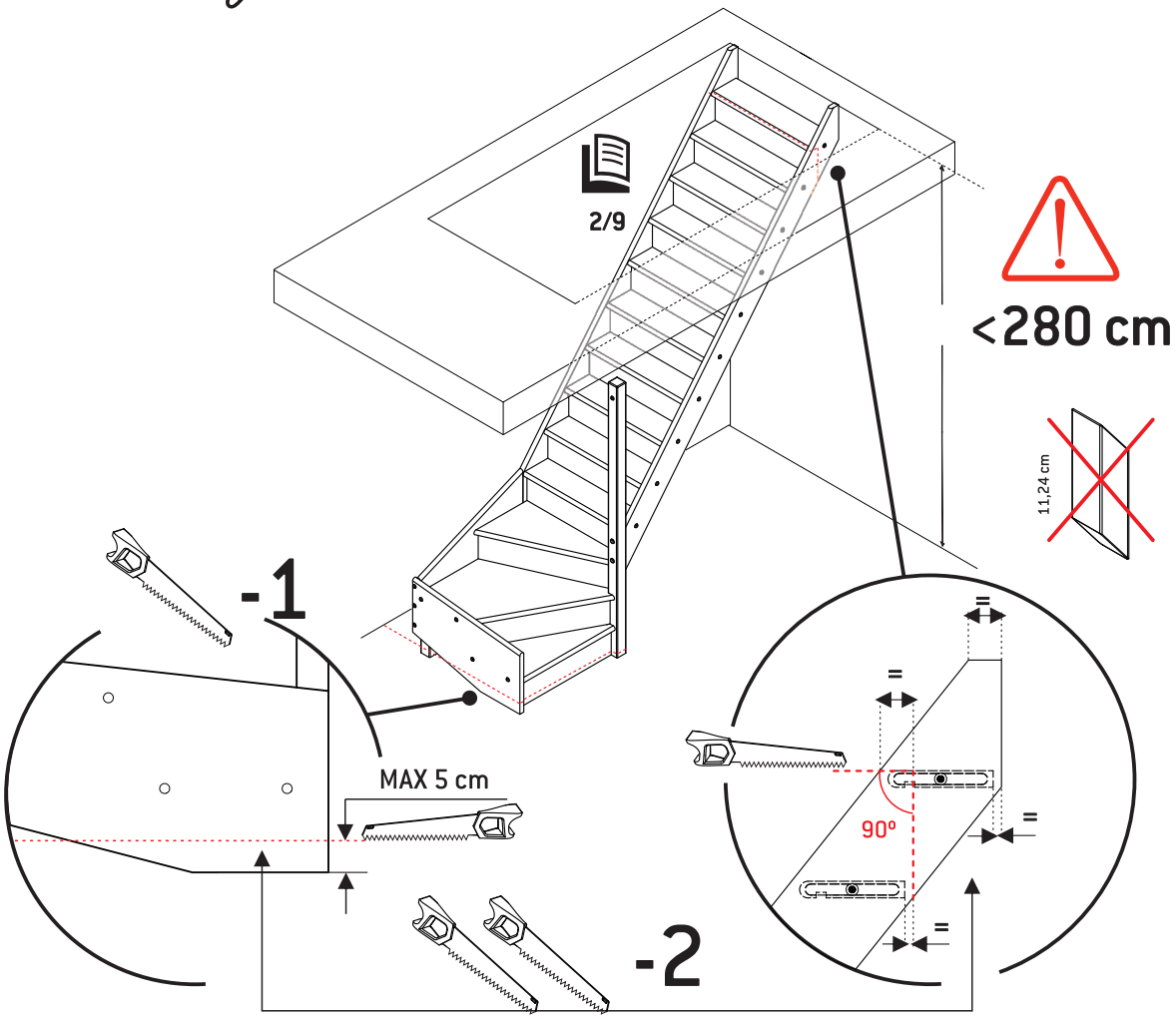
2/9
<280 cm
11,24 cm
-1
MAX 5 cm
90°
-2

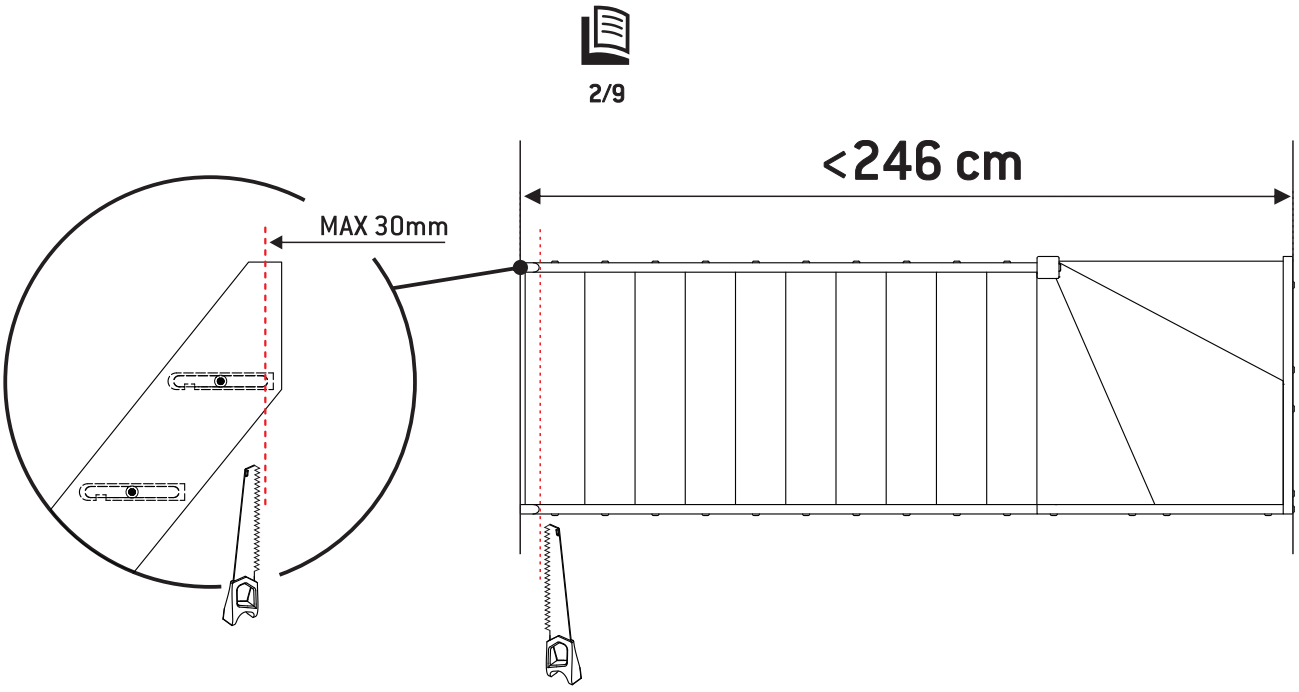
2/9
<246 cm
MAX 30mm

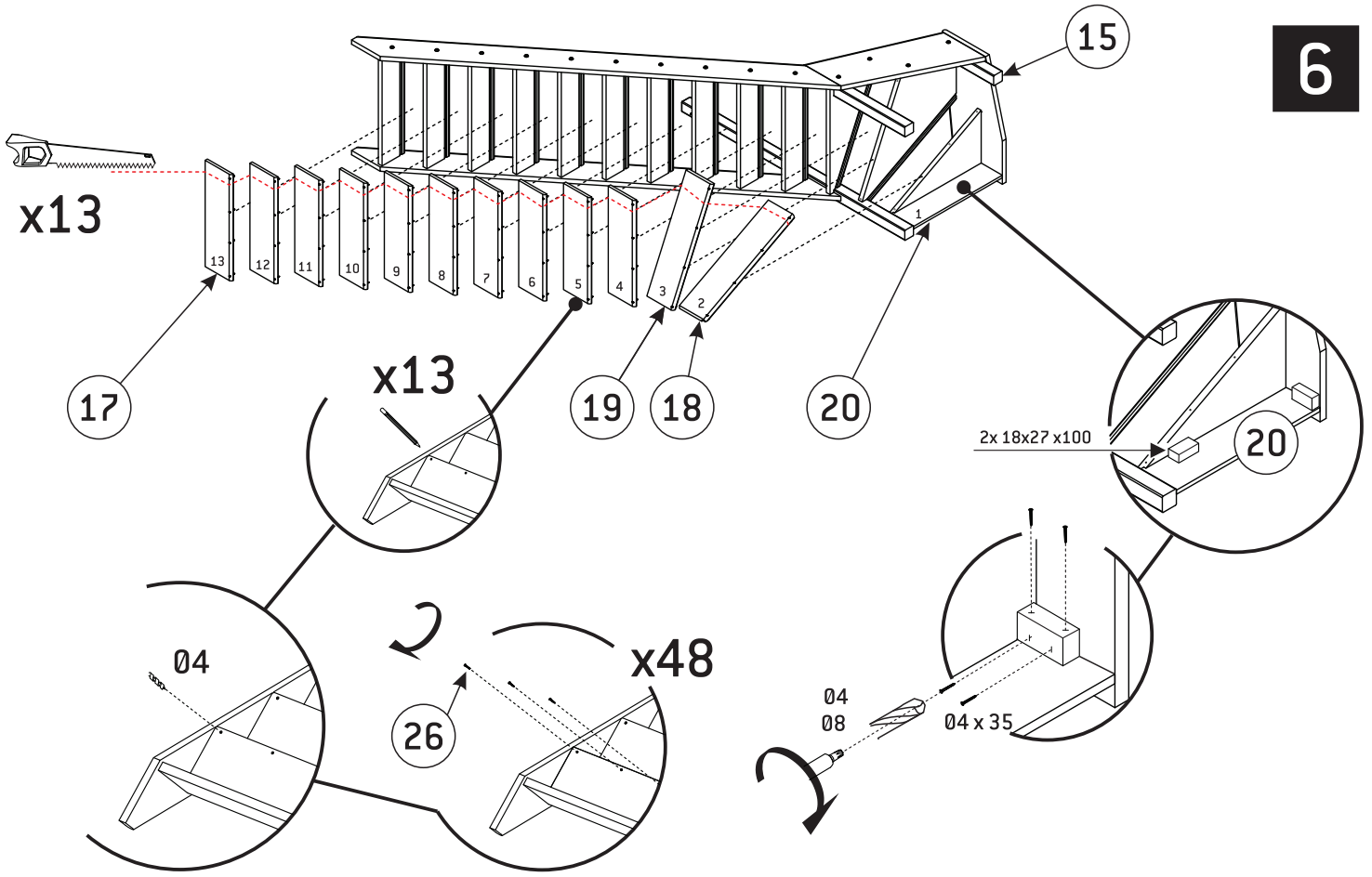
6
15
x13
13
12
11
10
9
8
7
6
5
4
3
2
1
17
x13
19
18
20
2x 18x27 x100
20
04
x48
26
04
08
04 x 35

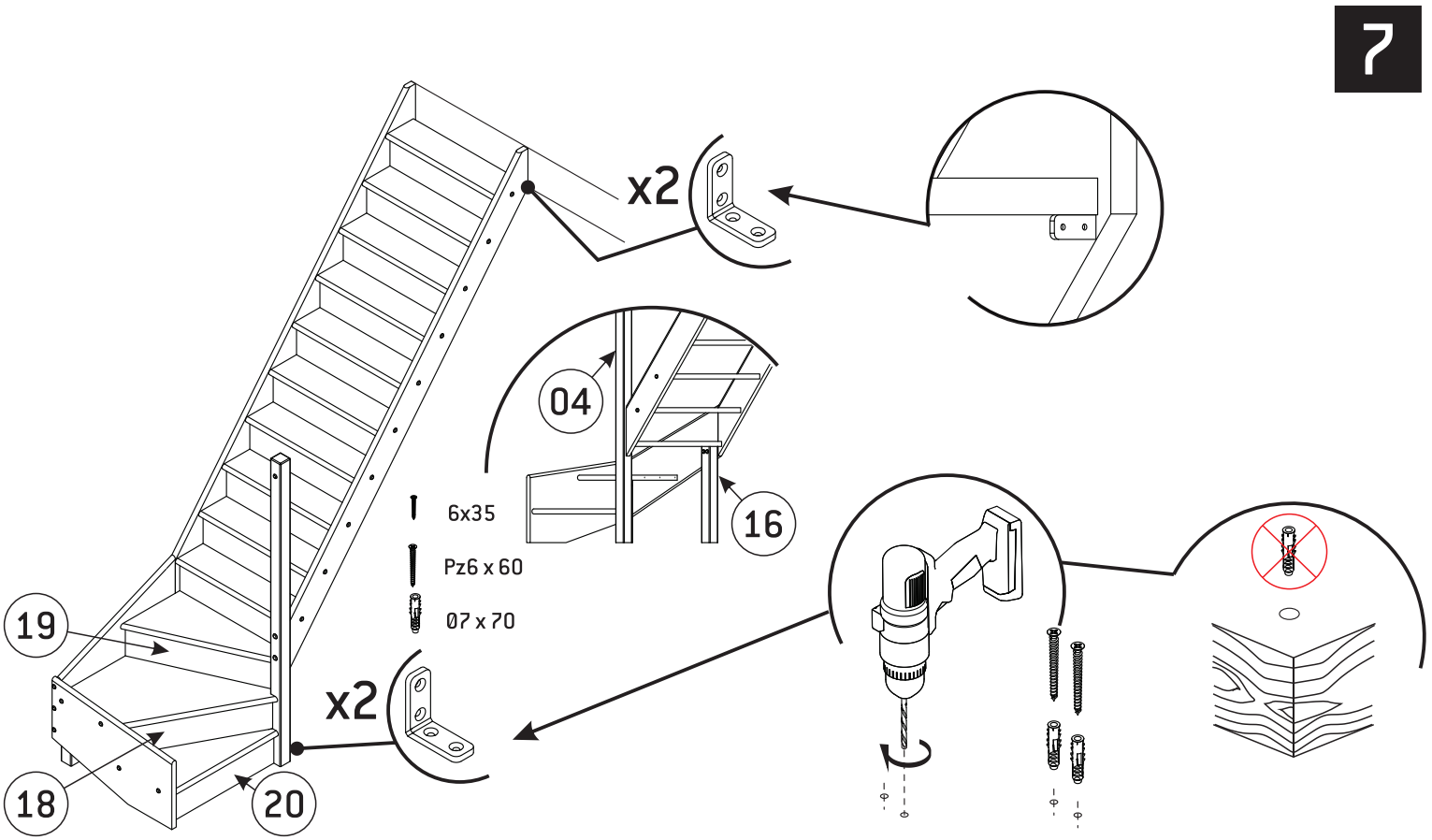
7
x2
04
16
6x35
Pz6 x 60
07 x 70
19
x2
18
20

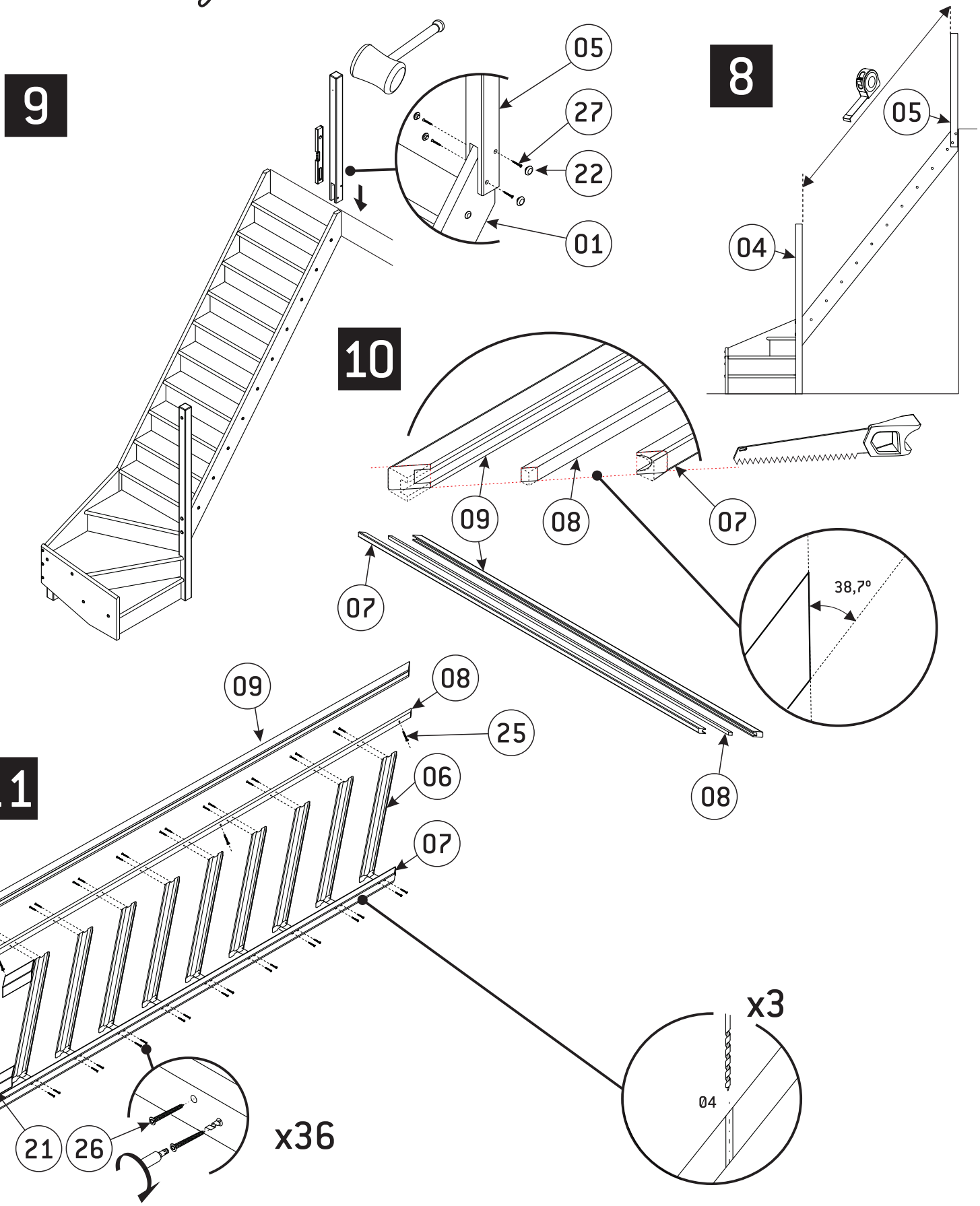
9
05
27
22
01
8
05
04
10
09
08
07
07
38,7°
08
11
09
08
25
06
07
21
26
x36
x3
04

12

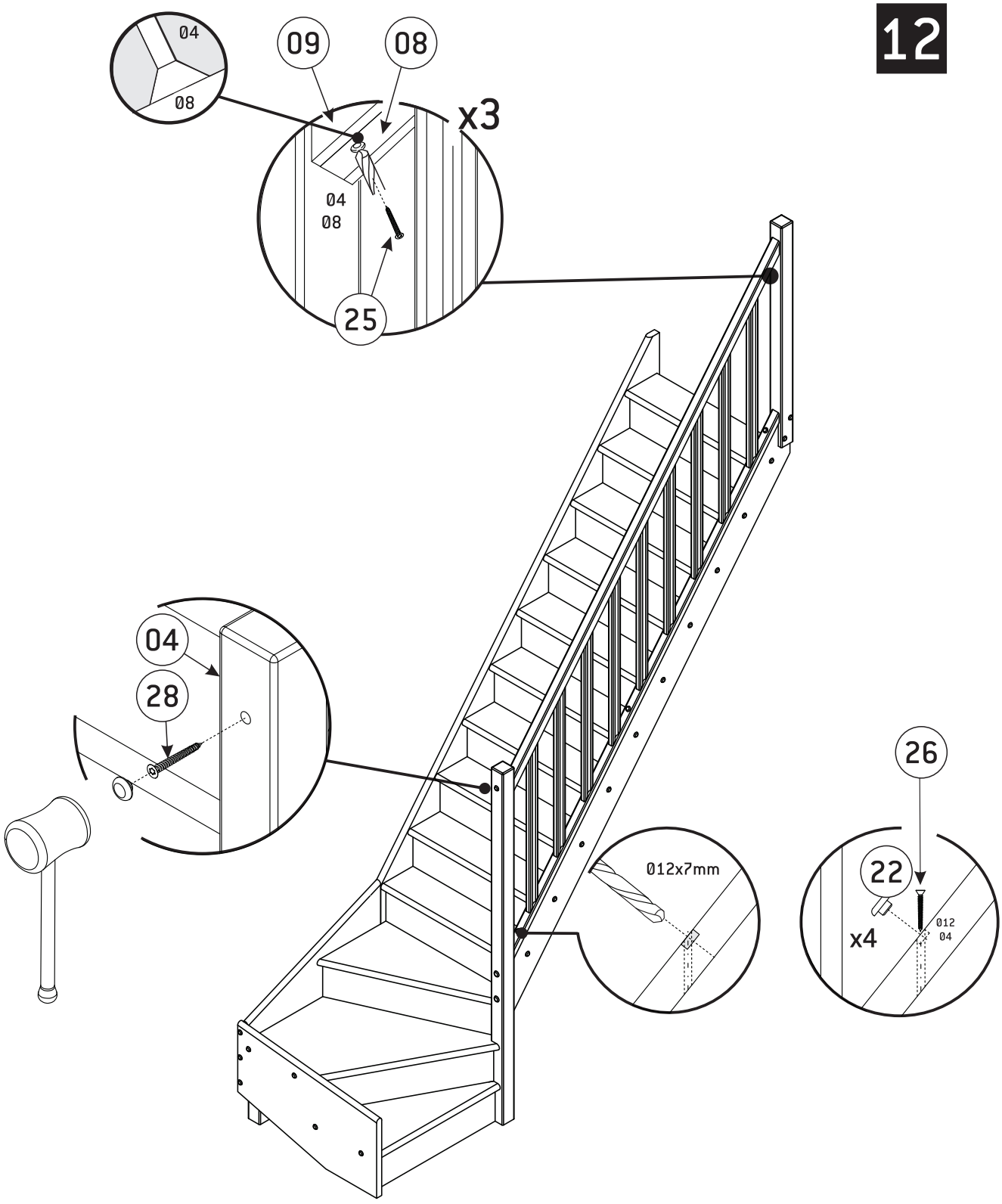

RUE GRIMARD,39 B-6061 MONTIGNIES-SUR-SAMBRE(CHARLEROI)-BELGIUM
TEL: +32/71/25.39.60 FAX: +32/71/25.39.72 E-MAIL: info@sogem-sa.com