SOGEM Group

TRADI ECO

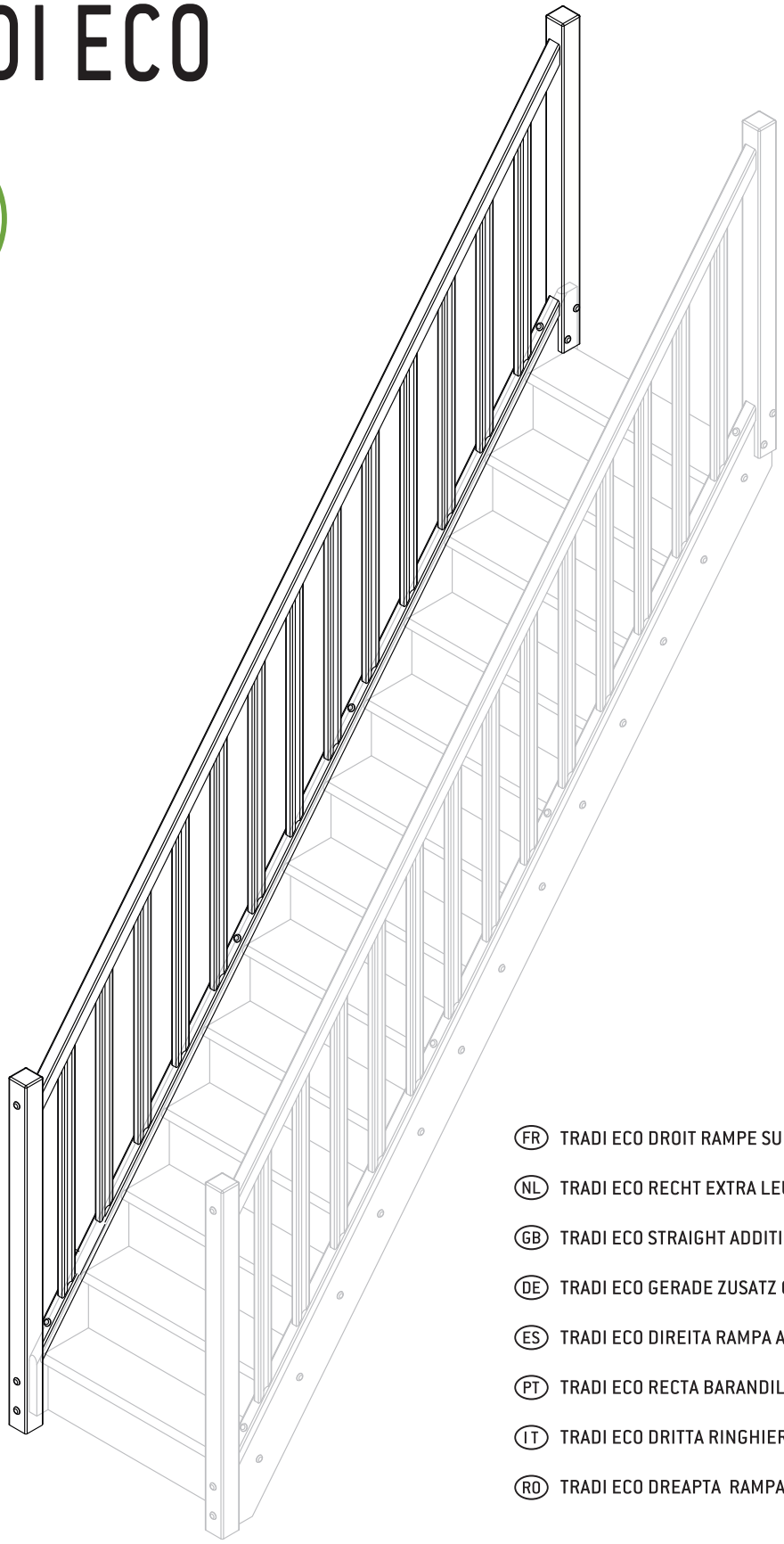

(FR) TRADI ECO DROIT RAMPE SUPLEMENTAIRE

(NL) TRADI ECO RECHT EXTRA LEUNING

(GB) TRADI ECO STRAIGHT ADDITIONAL BANISTER

(DE) TRADI ECO GERADE ZUSATZ GELÄNDER

(ES) TRADI ECO DIREITA RAMPA ADICIONAL

(PT) TRADI ECO RECTA BARANDILLA ADICIONAL

(IT) TRADI ECO DRITTA RINGHIERA SUPPLEMENTARI

(RO) TRADI ECO DREAPTA RAMPA SUPLIMENTARA

SOGEM Group

01	02	03	04	05	06	07	08	09
70x70x1190	70x70x1125	25x50x874	30x42x3375	16x26x3375	42x45x3375	45x25x222	012x11	04x35
x1	x1	x13	x1	x1	x1	x2	x12	x4

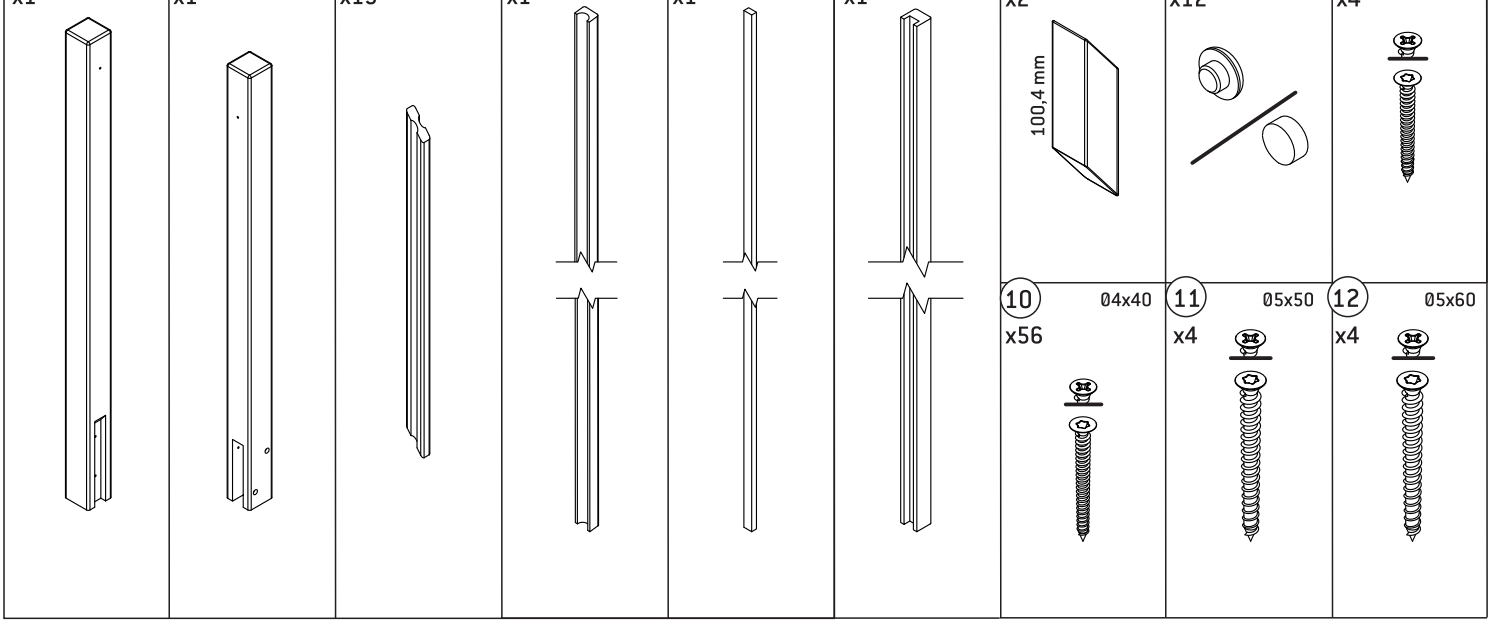

10	11	12
04x40	05x50	05x60
x56	x4	x4

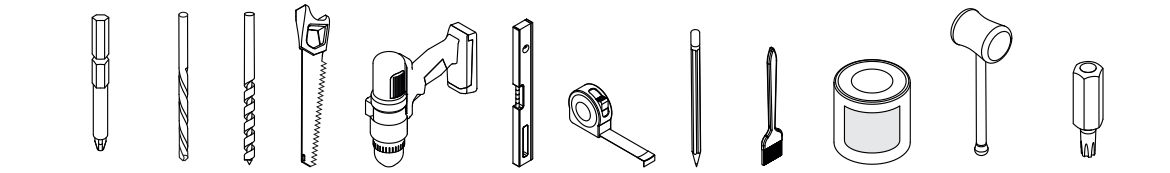

Pz2/3 | 010 04;08 | 04 | Tx10-30

3:30h

1

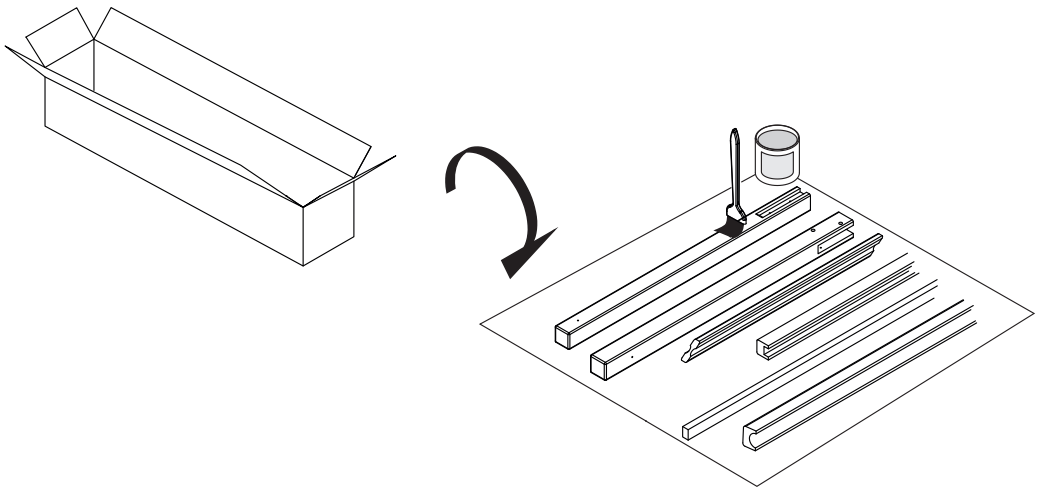

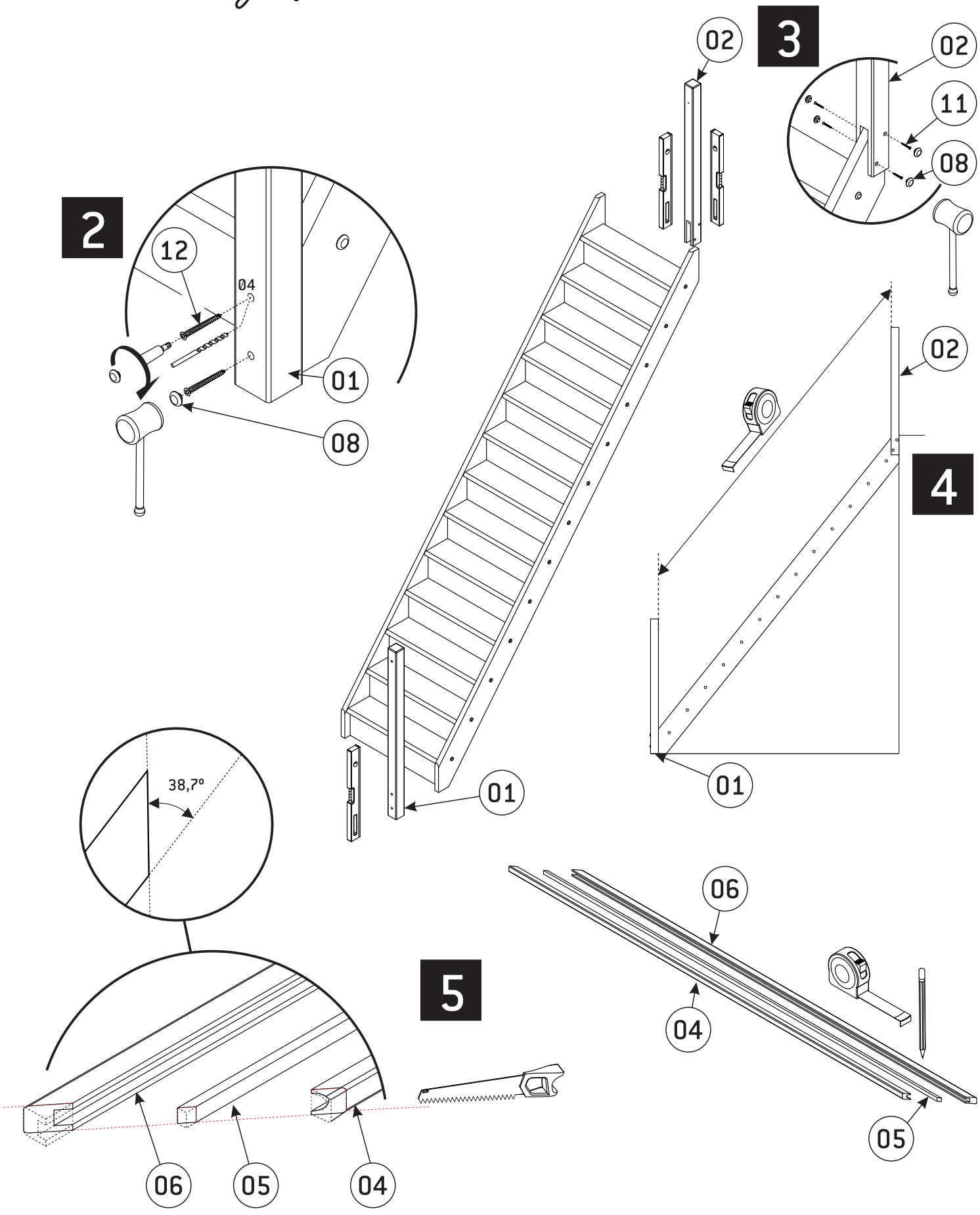
2
12
04
01
08
3
02
11
08
02
01
4
02
01
38,7°
5
06
05
04
06
04
05

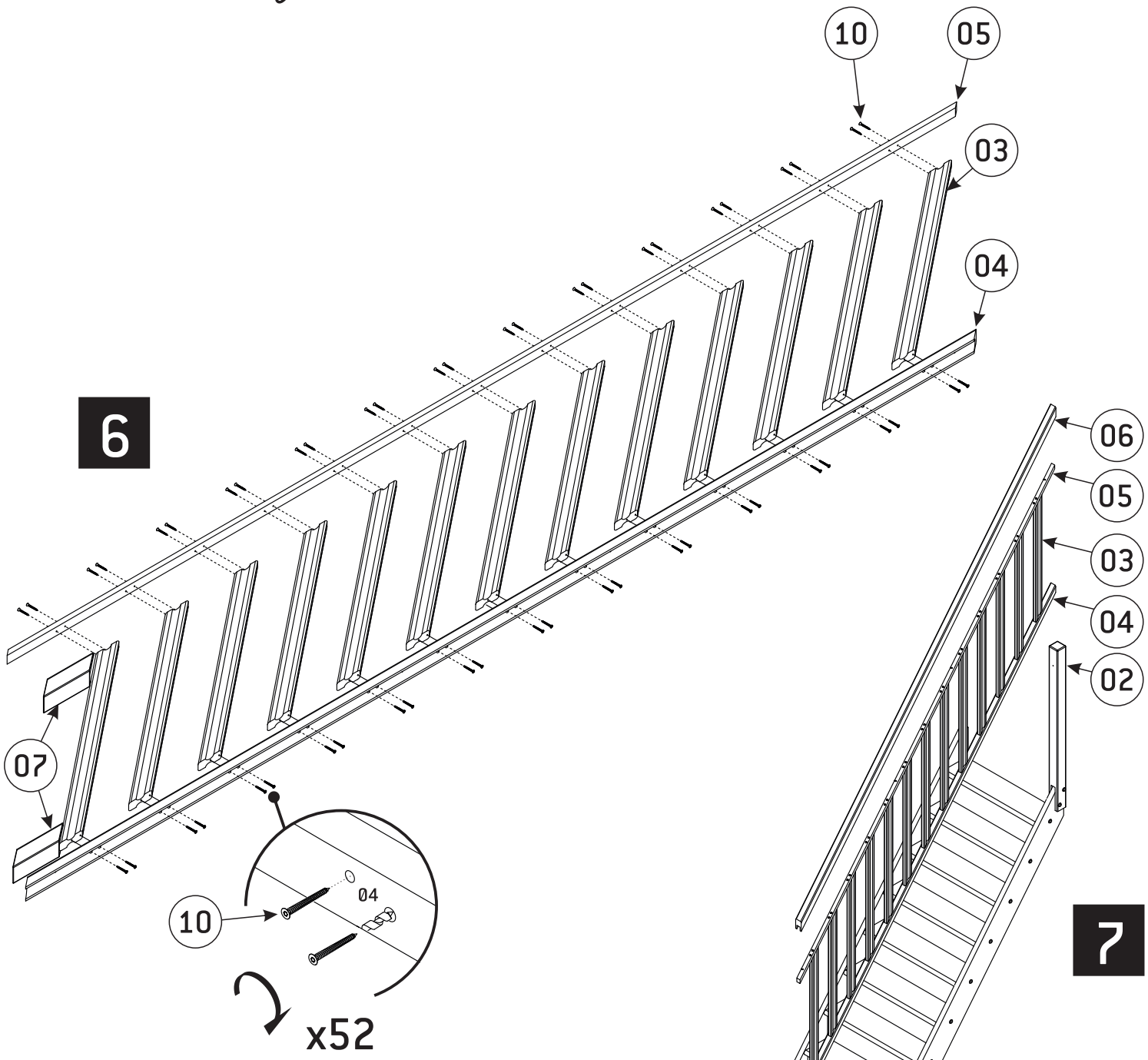
10
05
03
04
6
07
10
04
x52

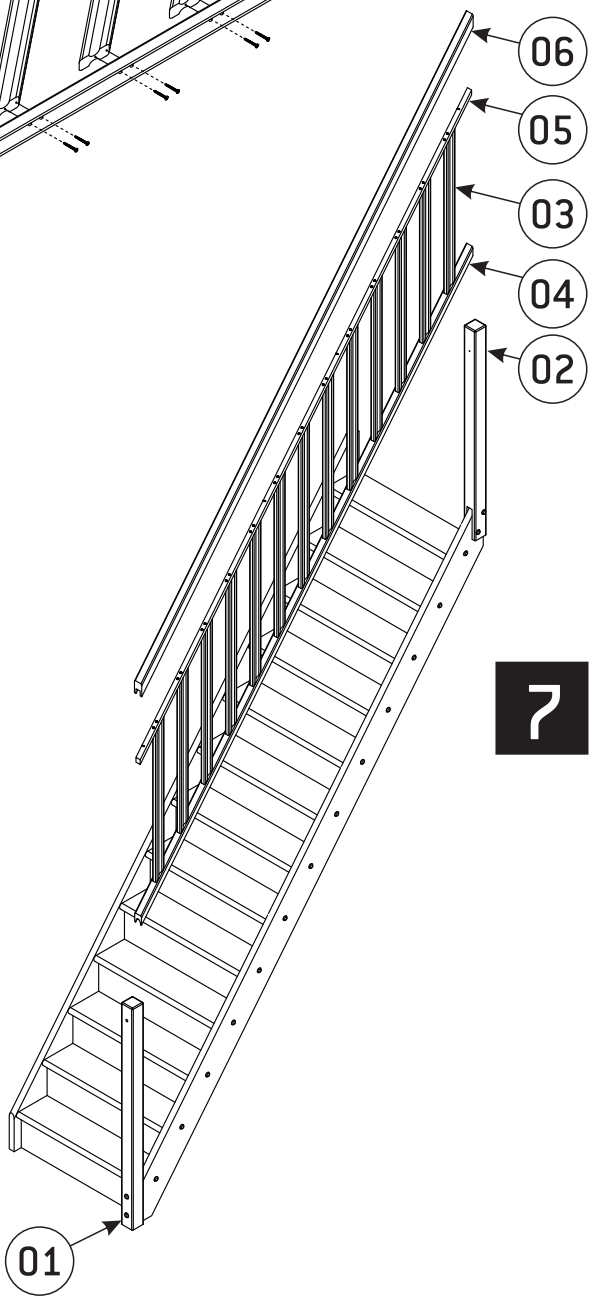
06
05
03
04
02
7
01

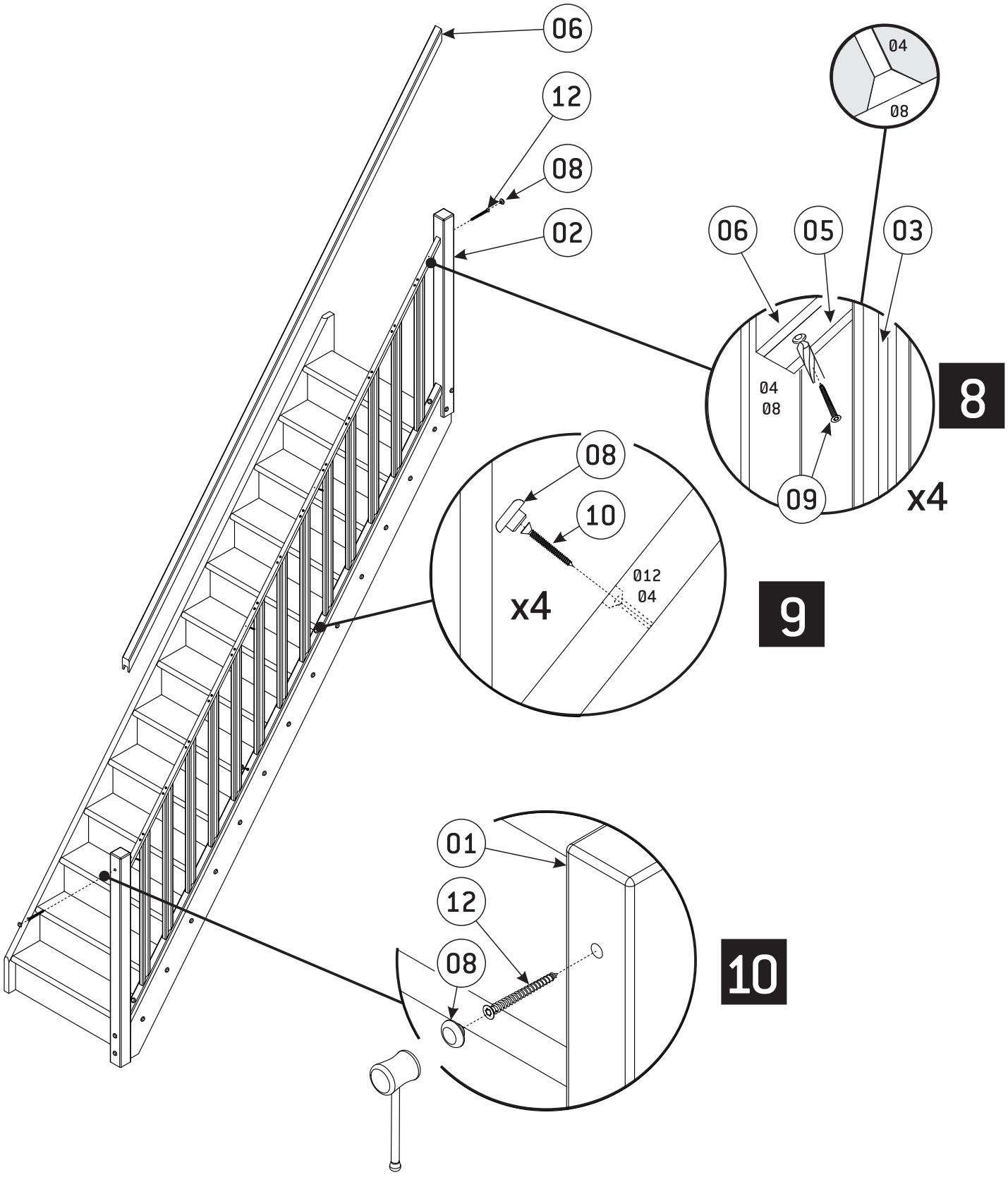
06
12
08
02
04
08
06
05
03
04
08
09
x4
8
08
10
x4
012
04
9
01
12
08
10

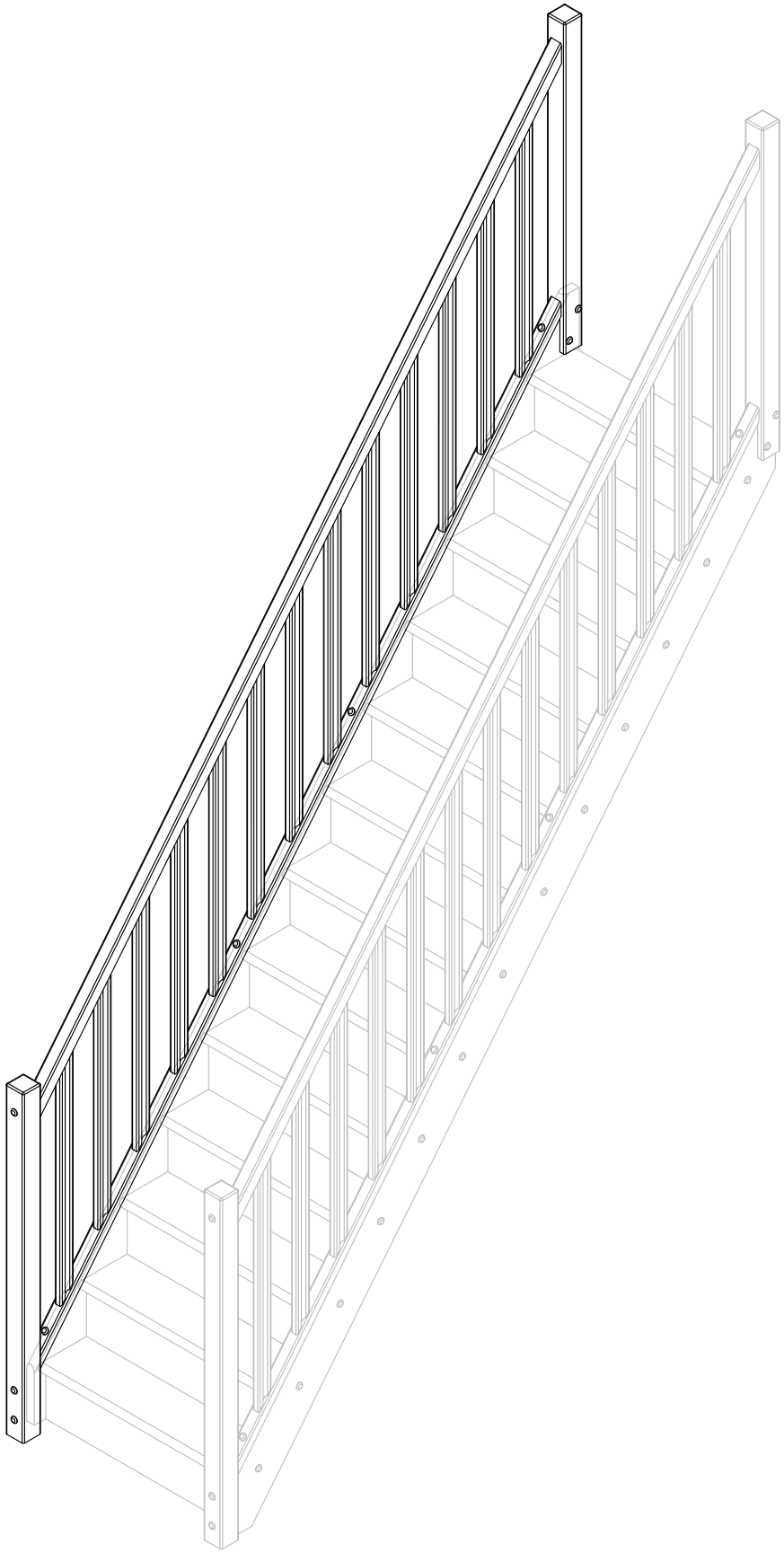

RUE GRIMARD,39 B-6061 MONTIGNIES-SUR-SAMBRE(CHARLEROI)-BELGIUM
TEL: +32/71/25.39.60 FAX: +32/71/25.39.72 E-MAIL: info@sogem-sa.com