SOGEM Group

COTTAGE JUNIOR 1/4T GAUCHE

(FR) COTTAGE JUNIOR 1/4T

(NL) COTTAGE JUNIOR 1/4T

(GB) COTTAGE JUNIOR 1/4T

(DE) COTTAGE JUNIOR 1/4T

(ES) COTTAGE JUNIOR 1/4T

(RO) COTTAGE JUNIOR TURNANTA

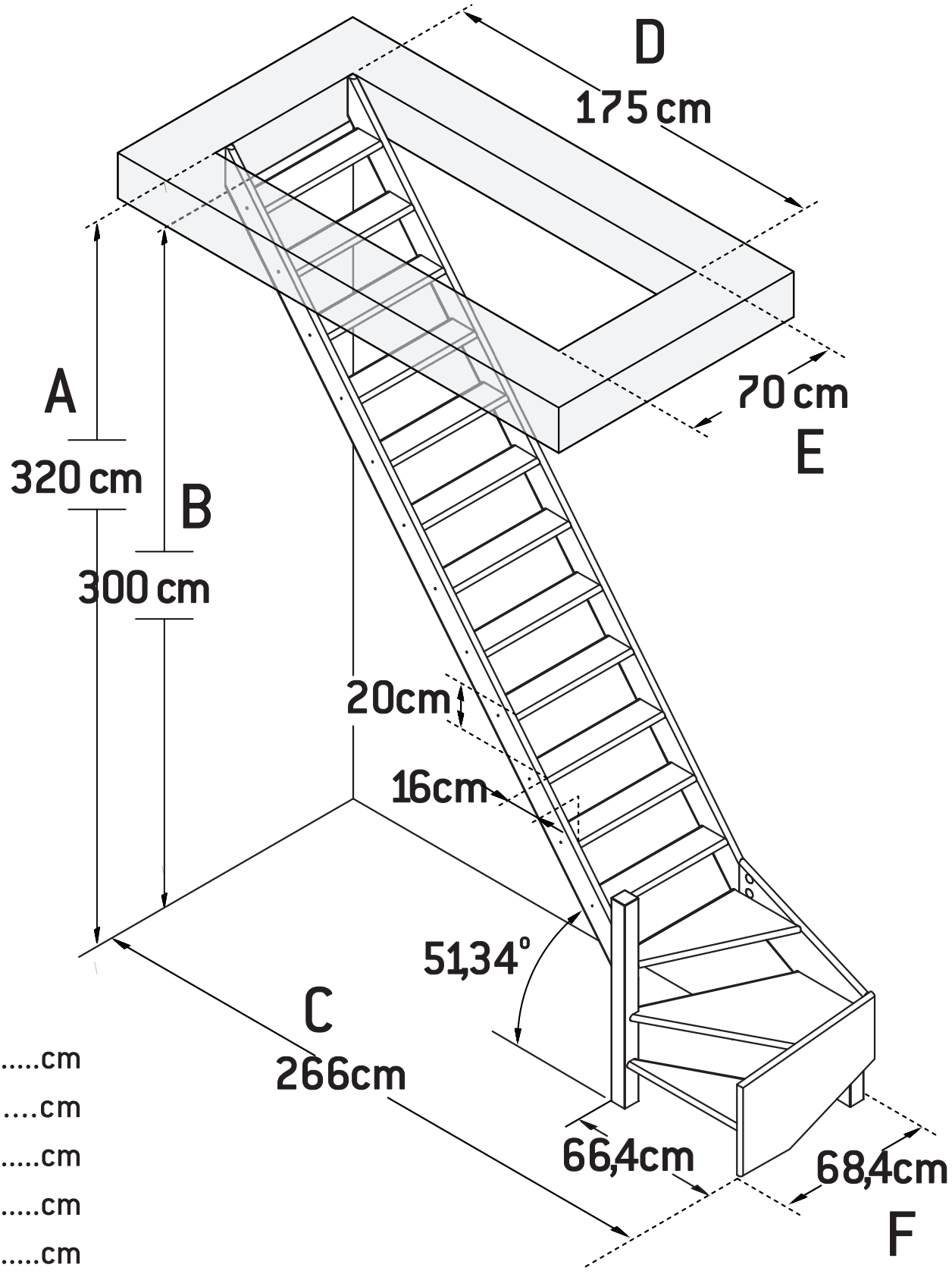

A .....cm

B.....cm

C .....cm

D .....cm

E .....cm

F .....cm

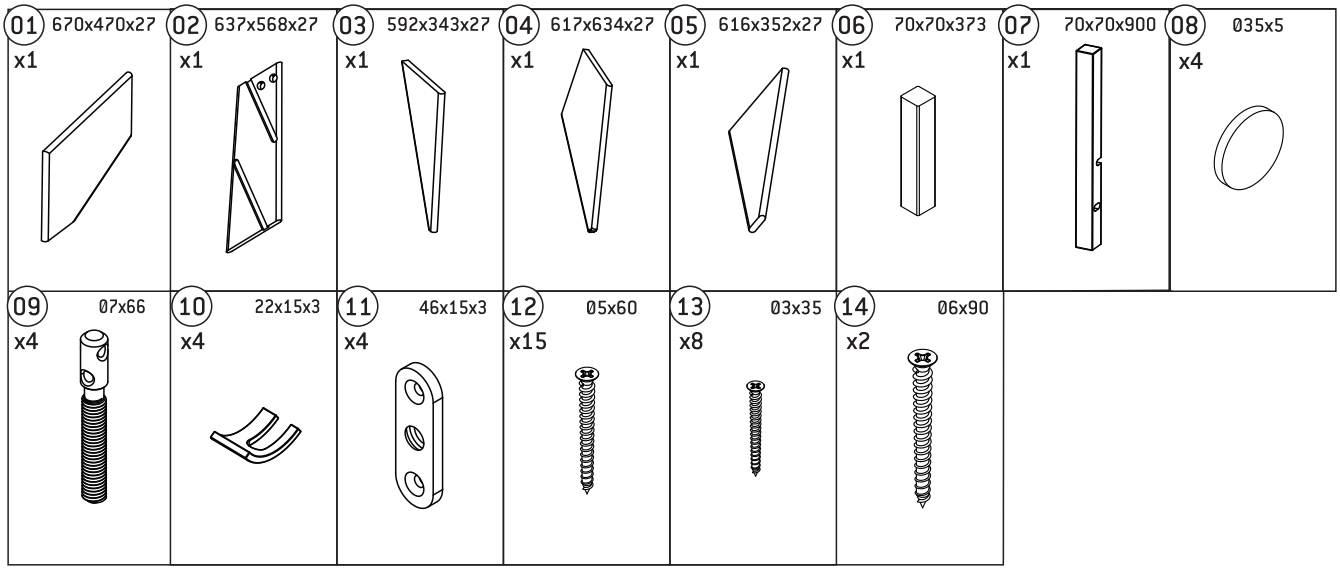

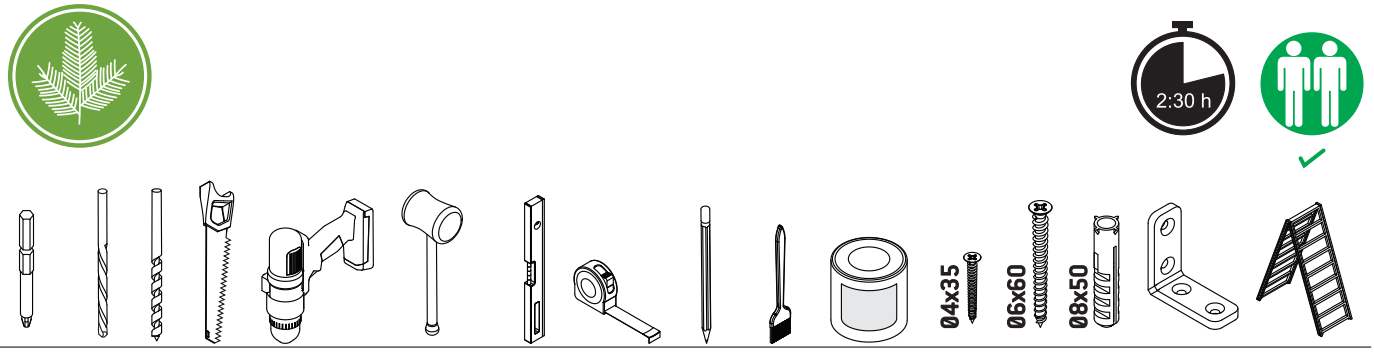

Ph2/3 Pz2/3 010 08 04 012

1

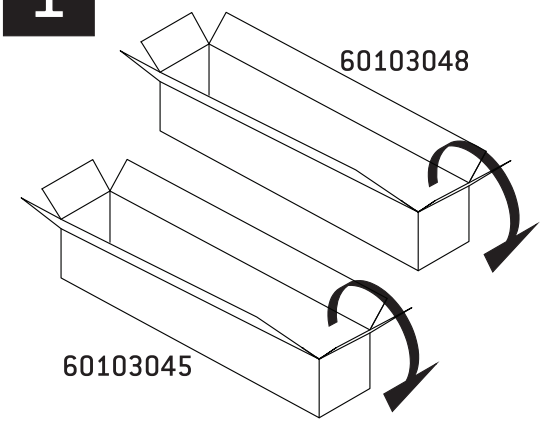

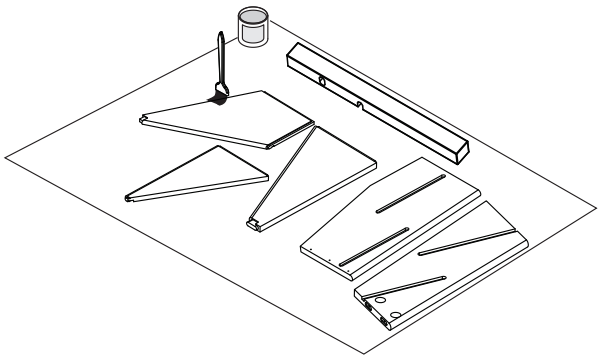

2

60103045

3

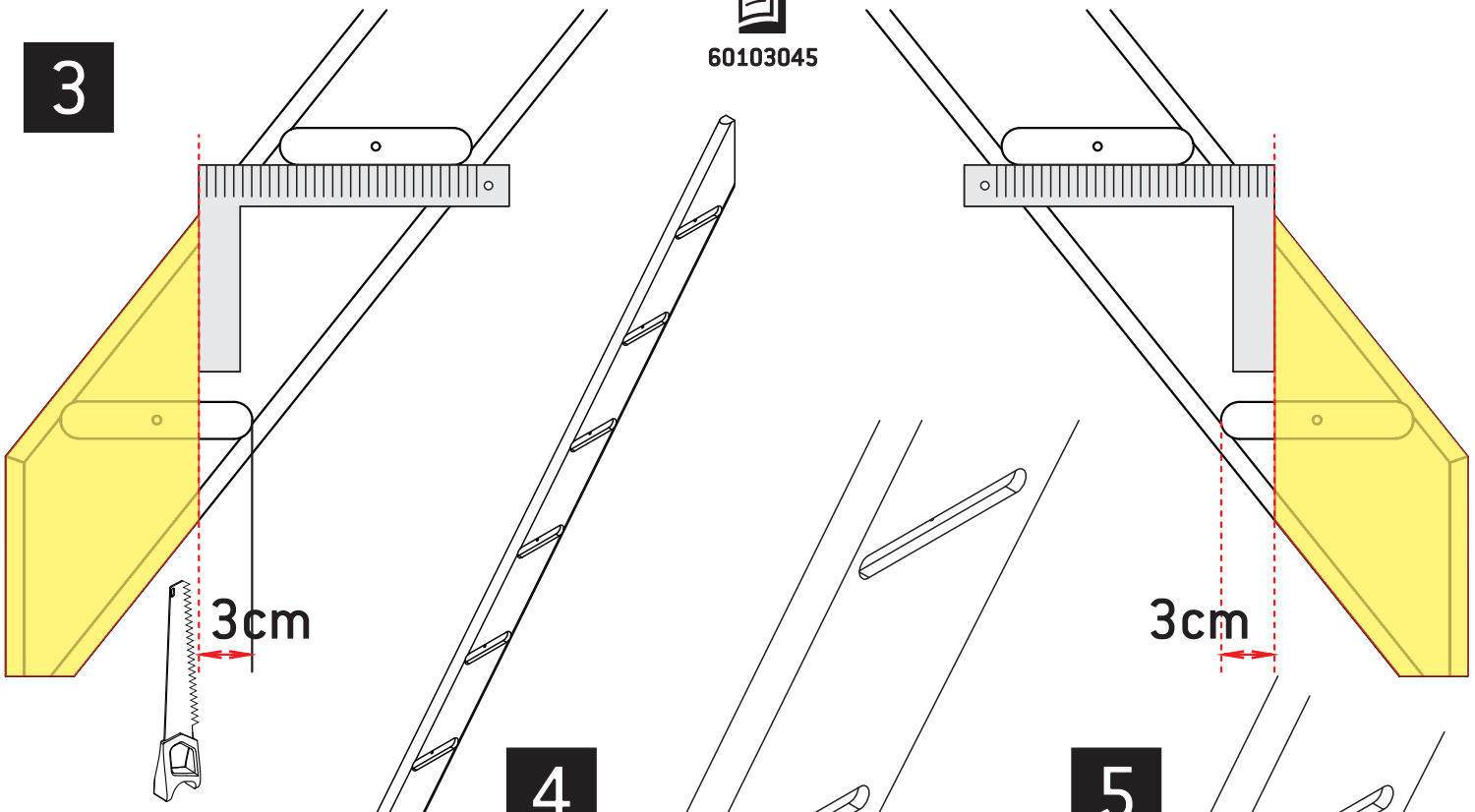

4

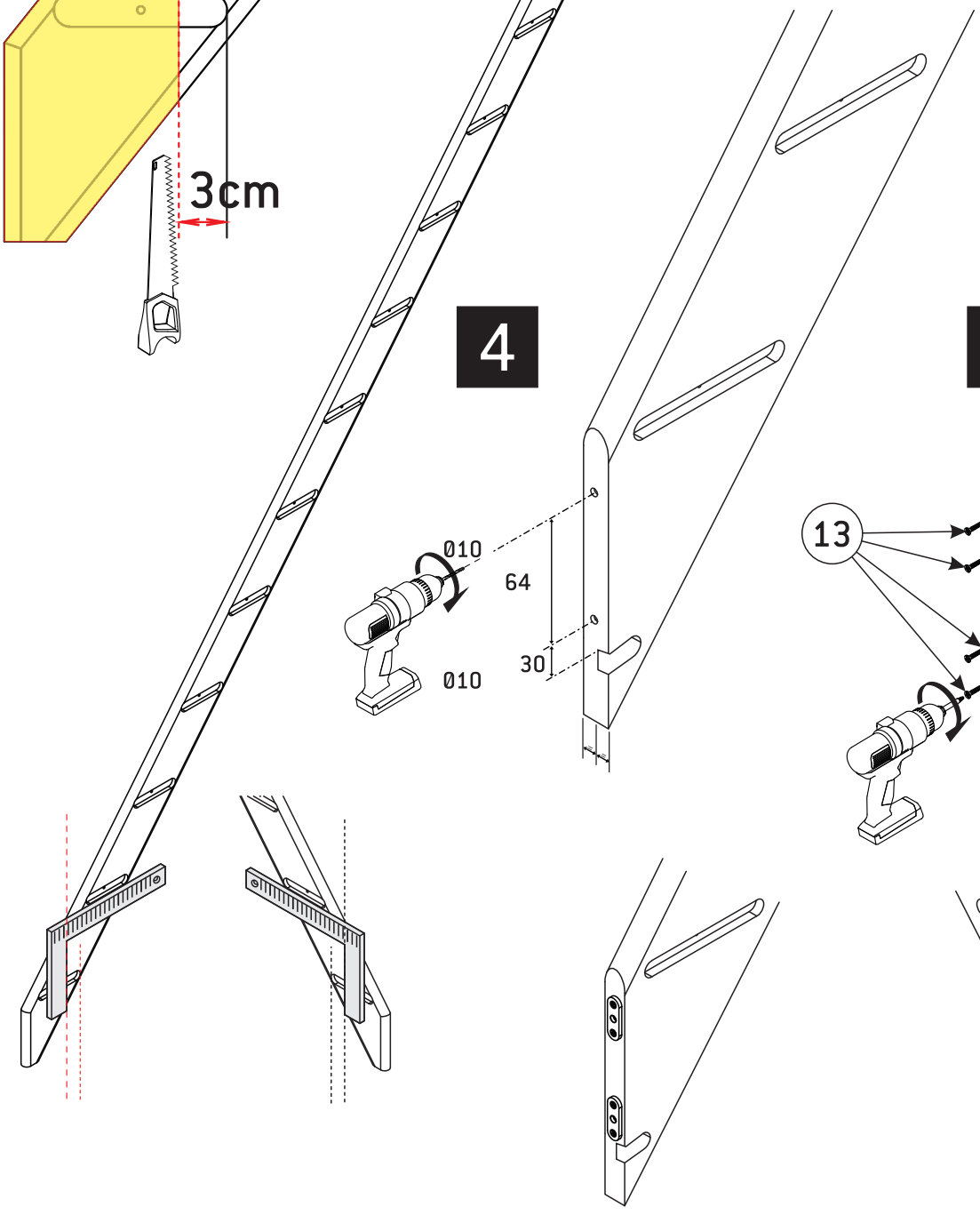

5

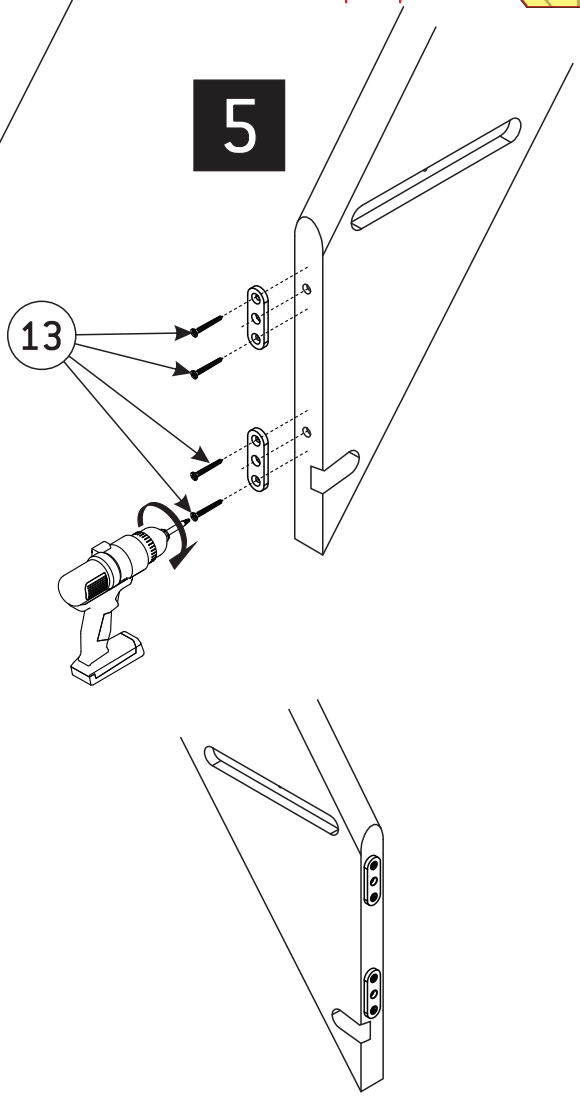

6

60103045

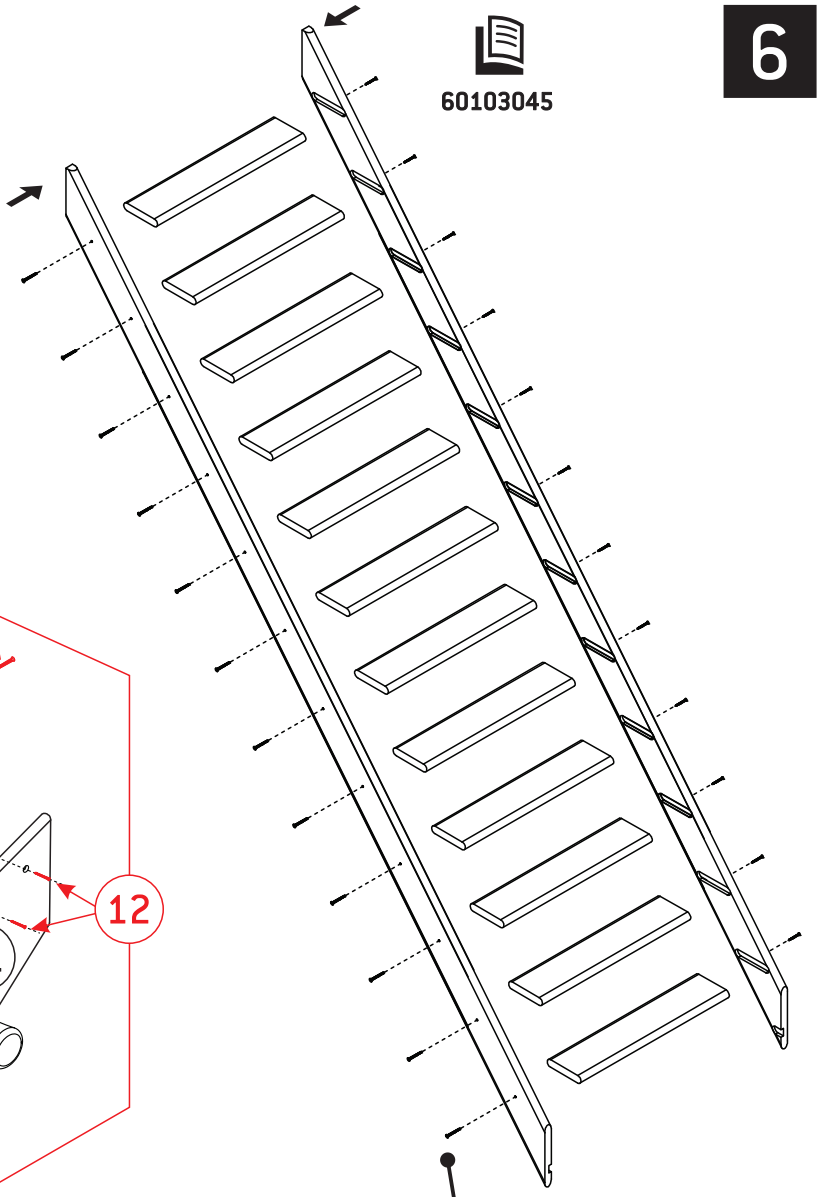

7

60103048

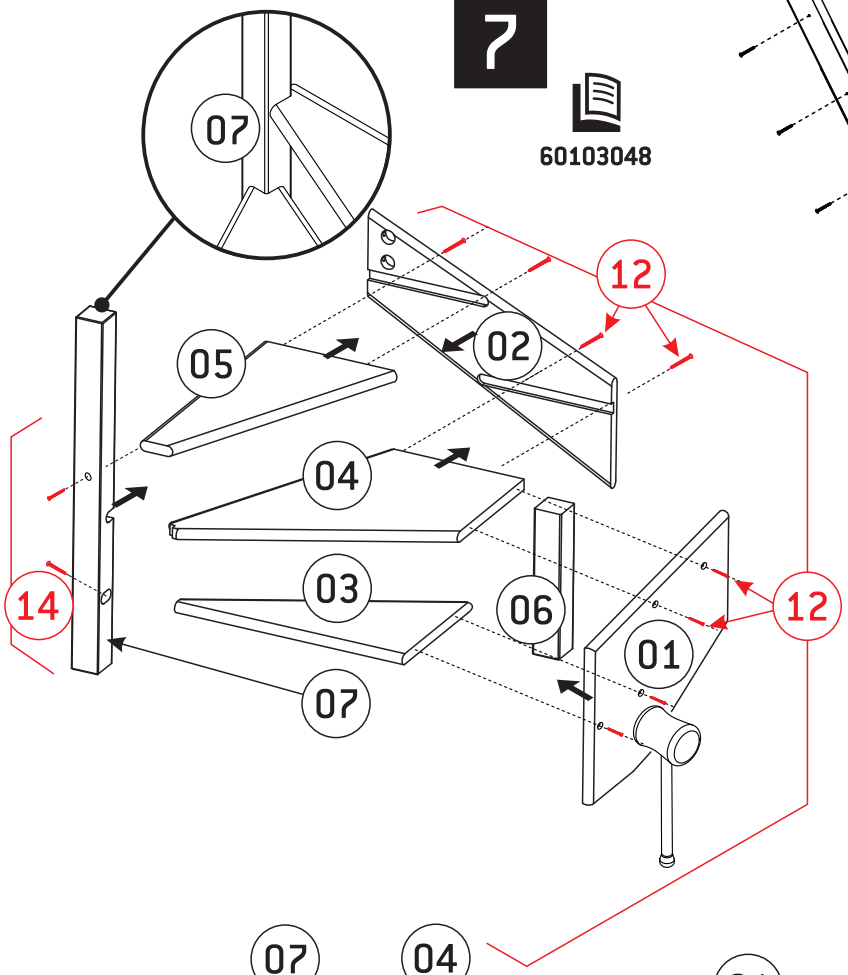

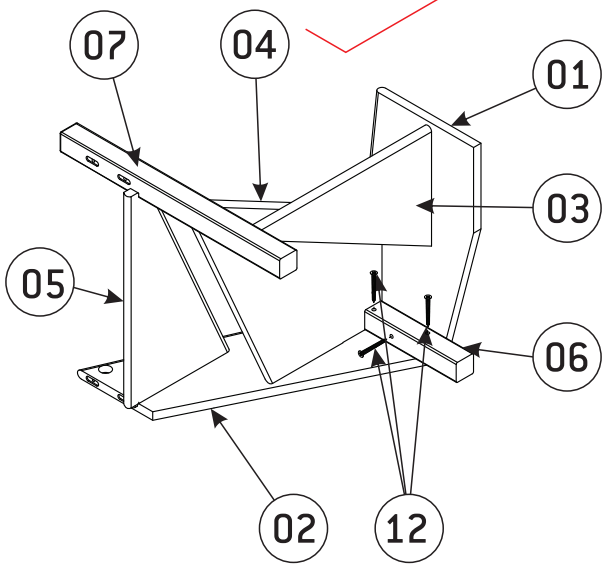

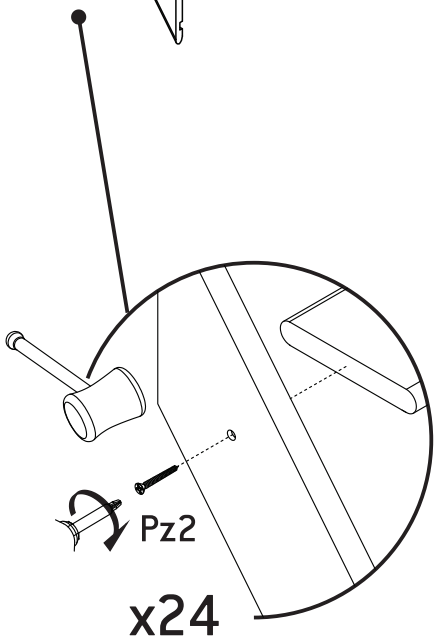

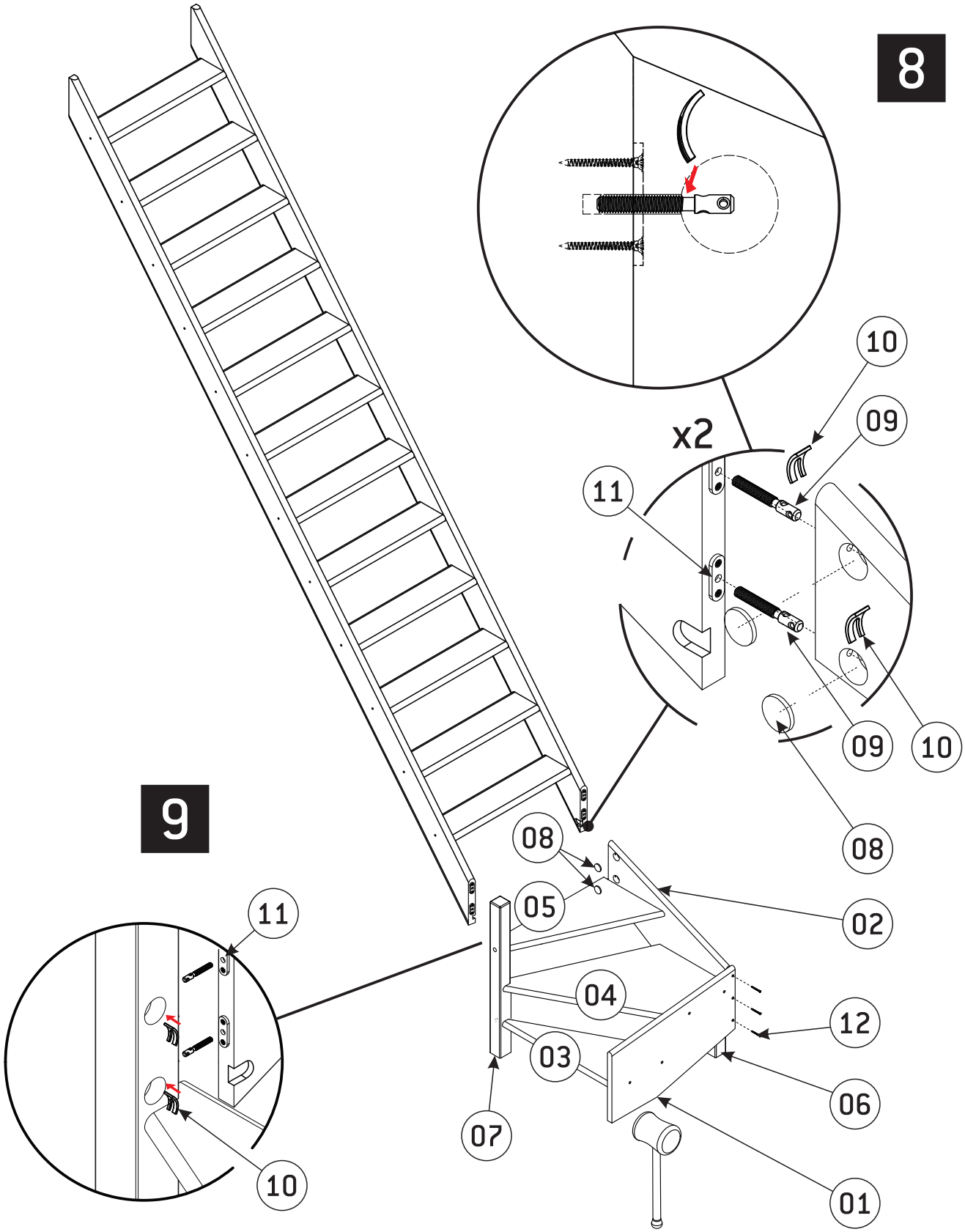
8
x2
10
09
11
09
10
08
9
11
10
08
05
02
04
12
03
06
07
01

10

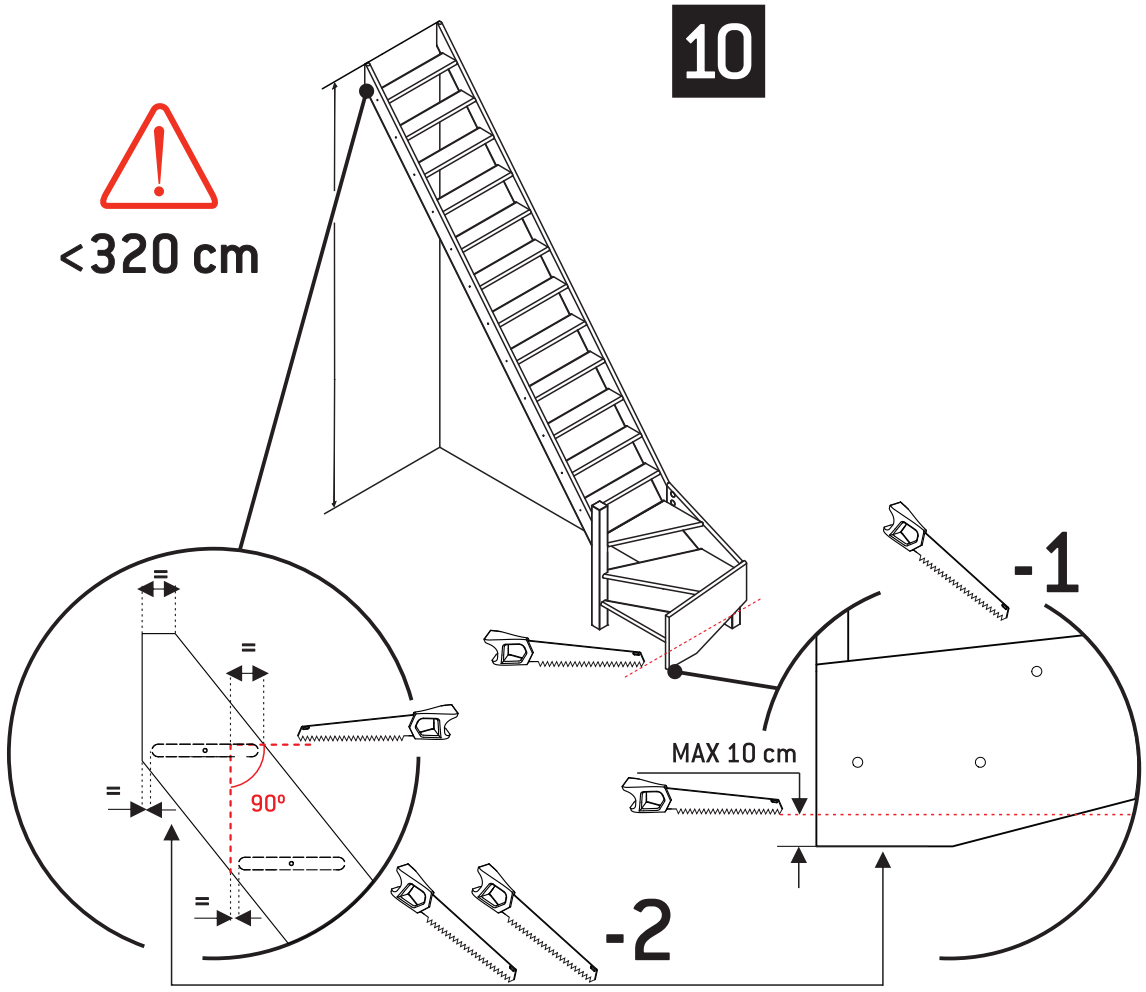

2/8

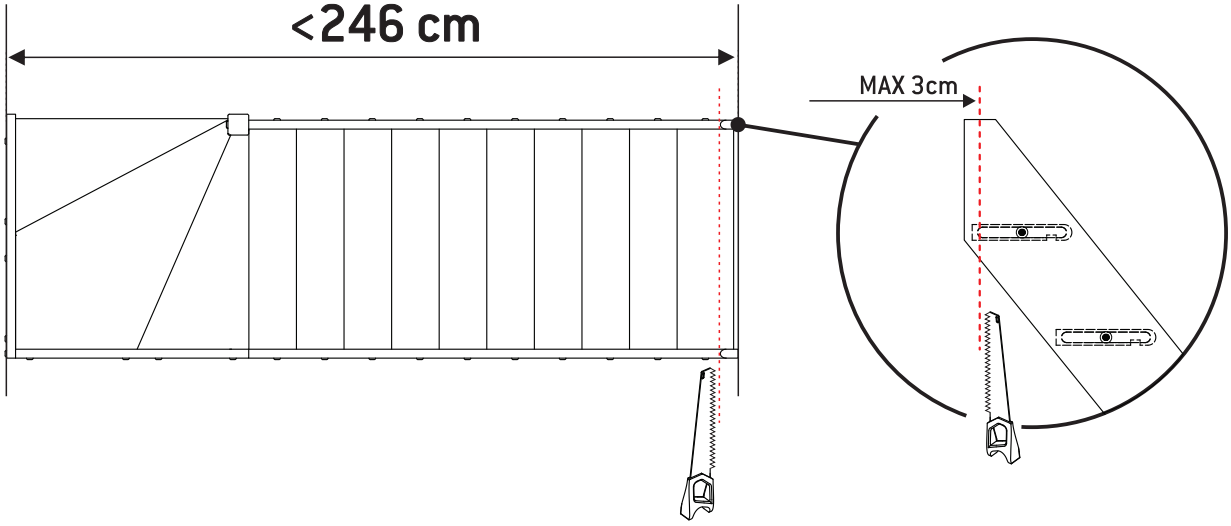

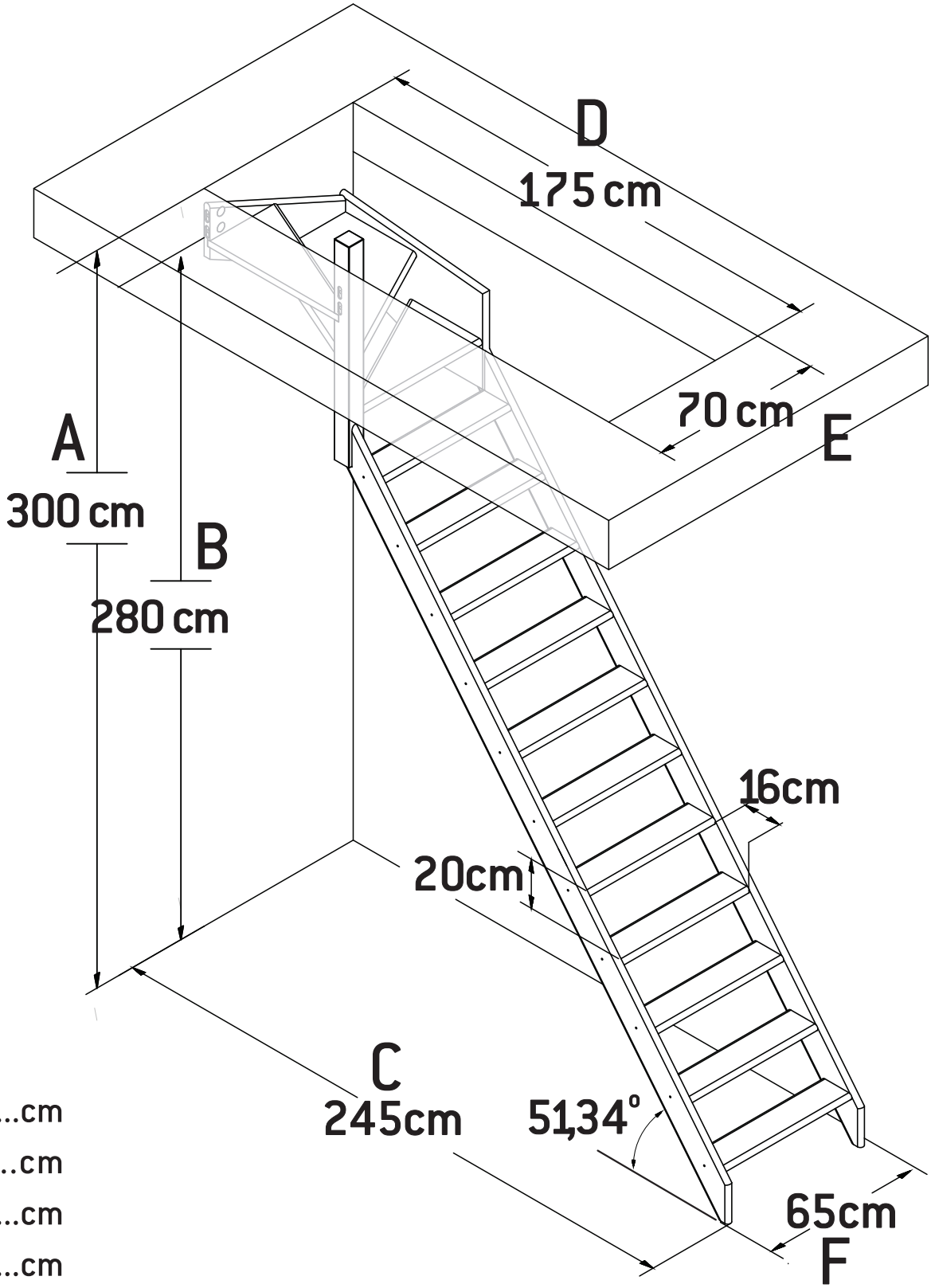

A .....cm
B.....cm
C .....cm
D .....cm
E .....cm
F .....cm

60103045

1

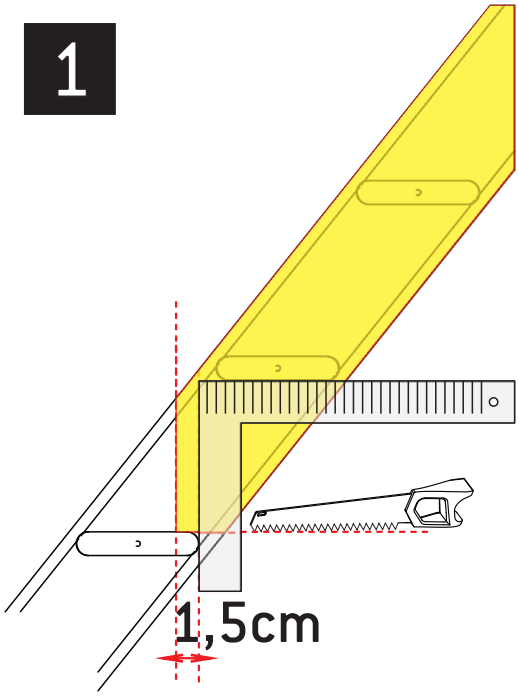

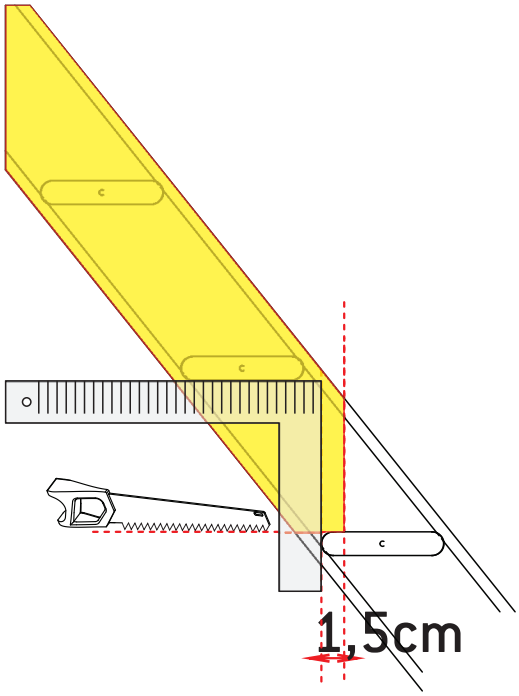

2

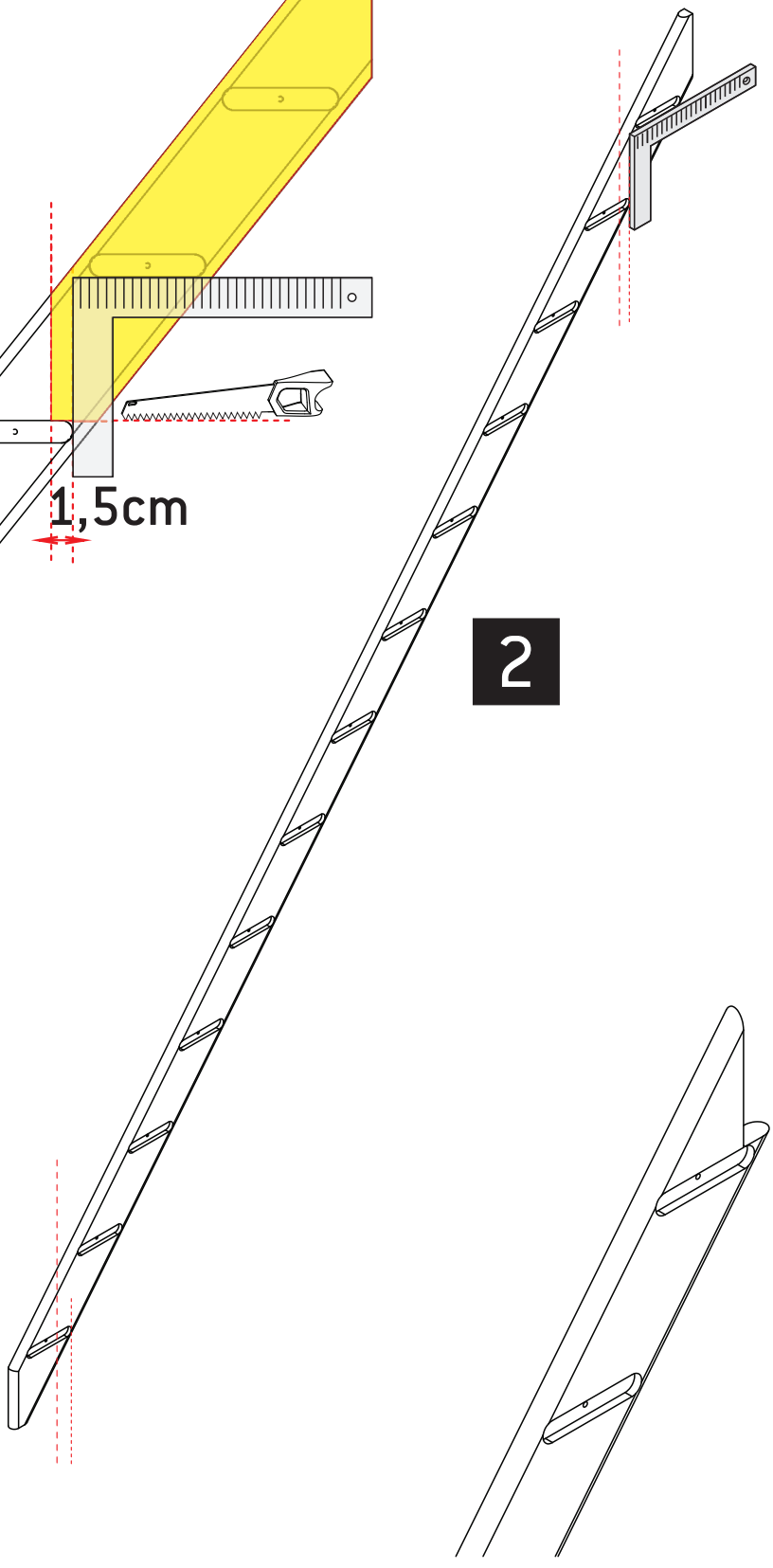

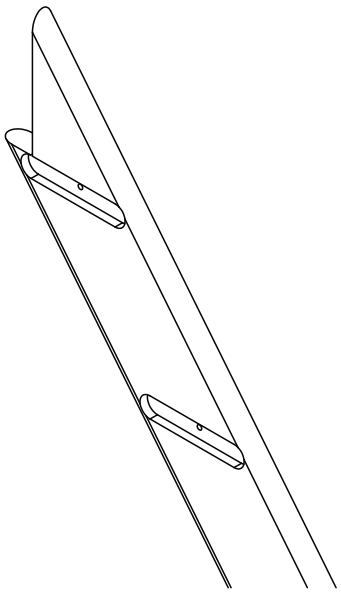

3

60103045

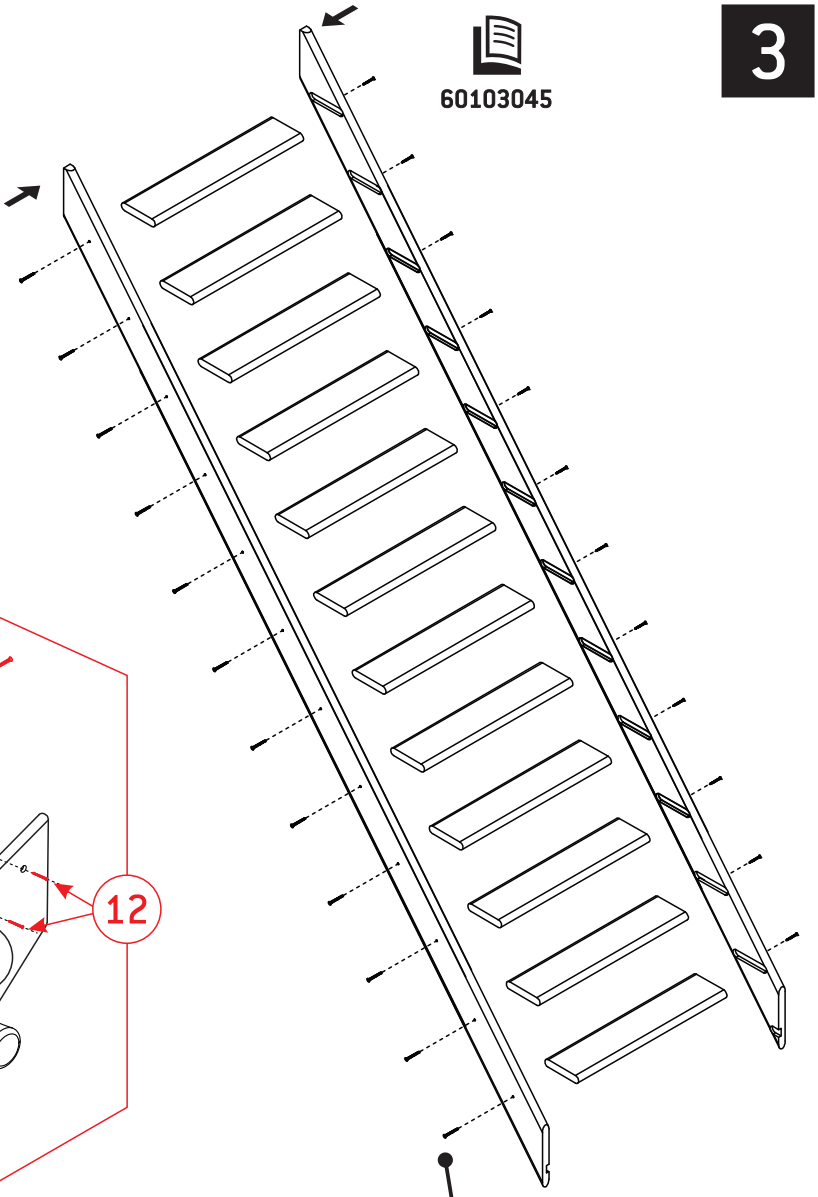

4

60103048

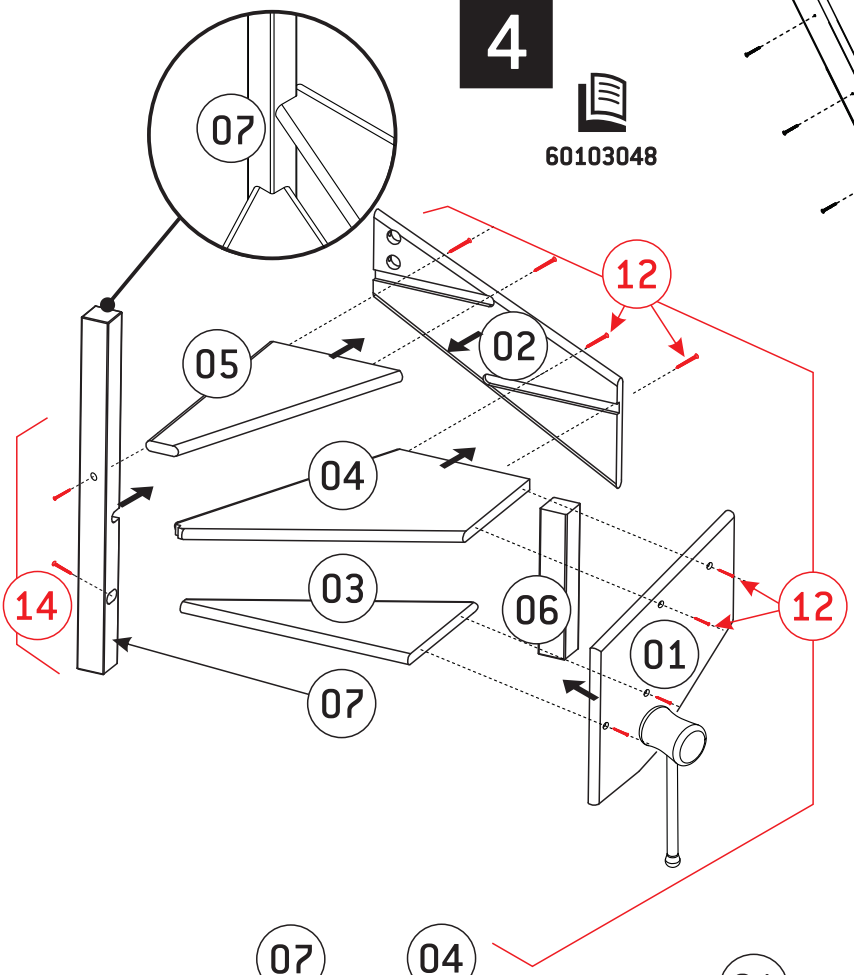

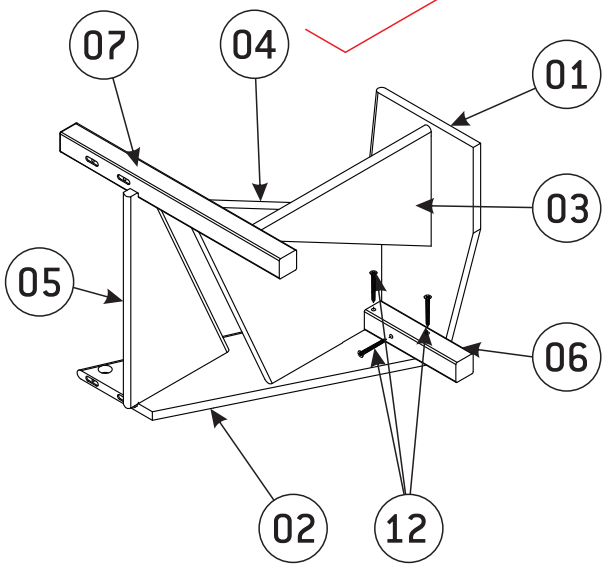

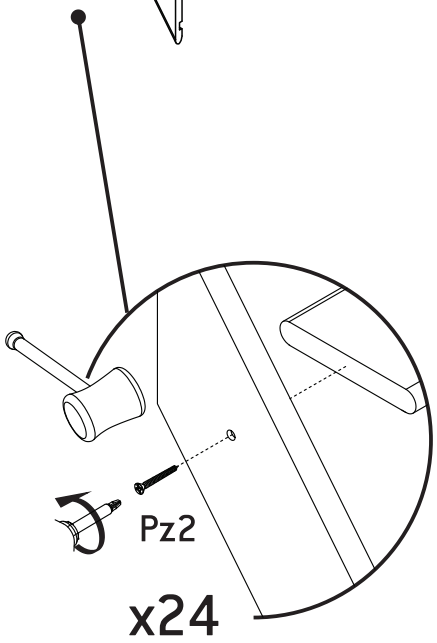

5

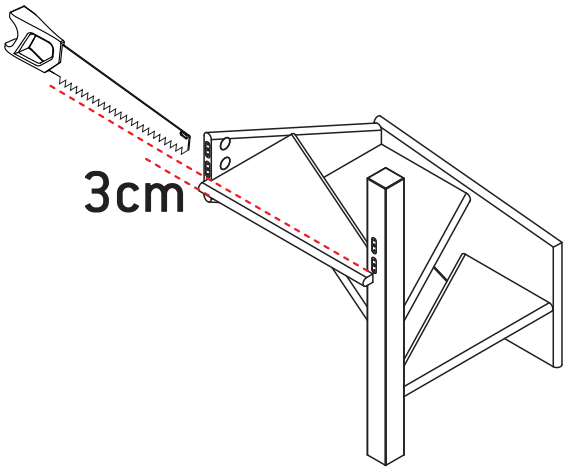

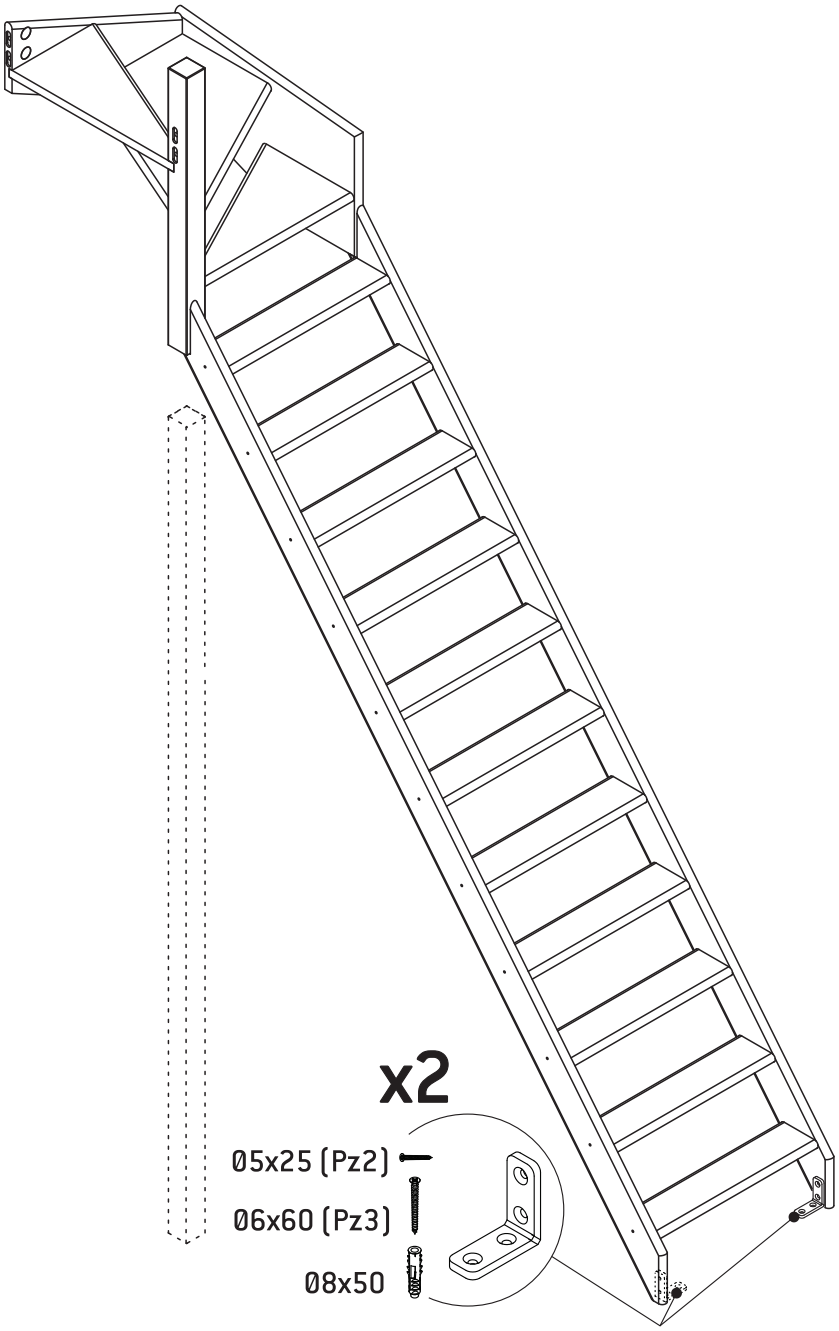

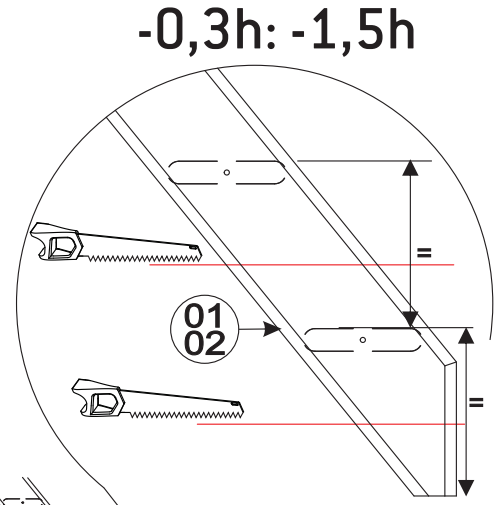

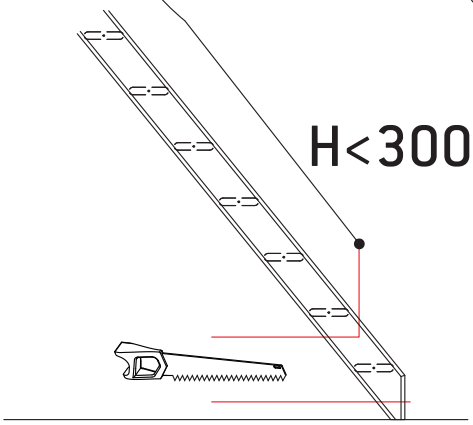

RUE GRIMARD,39 B-6061 MONTIGNIES-SUR-SAMBRE(CHARLEROI)-BELGIUM
TEL: +32/71/25.39.60 FAX: +32/71/25.39.72 E-MAIL: info@sogem-sa.com